CATALOG

LED Components & Light Engines

VaOpto

LED Manufacturer

CONTENT

INDICATION APPLICATION

CL CHIP LED

Brief Introduction 03
NEW! 1005 Series 04
NEW! 1608 Shiny-Color Series 05
1608 Ultrathin Series 06
1608 Series 07
DA1608 Series 08
2012 Series 09
3215 Series 10

TL TOP LED

Brief Introduction 12
3020 Series 13
3528 Series 14
5050 Series 15

LL LAMP LED

Brief Introduction 16
Lamp LED Series 17

LM LED Module

Brief Introduction 18
Display Module Series 19
Backlight Module Series 20

DISPLAY APPLICATION

IA Indoor

NEW! B1010 Series 23
NEW! B1515 Series 24
B2020 Series 25
B2724 Series 26
B3528 Series 27
3528 Series 28

OA Outdoor

N3535 Series 29
B3535 Series 30
H5050 Series 31

DA Decorative

5050 Series 32

LIGHTING APPLICATION

TP TOP LED

P3528 Series 35
NEW! TP3528 Series 36
3014 Series 37
T3528 Series 38
5630 Series 39
4014 Series 40
NEW! D4014 Series 41
3528 Series 42
5050 Series 43
2121 Series 44

PL POWER LED

NEW! EMC Series 45
NEW! Reverse bonding 3535 Series 46
3535 Series 47
6070 Series 48

CL COB LED

NEW! Metal PCB Series 49-52
NEW! Ceramic PCB Series 53-55
LED Auto Lights 56
LED Light Engine 57
Binning Information 58-61

Brief Introduction of CHIP LED

1. VAOPTO CHIP LED series include the 1005, 1608, 2012, and 3215 series. Each series offer various colors such as red, orange, yellow, green, blue, and white.

1005 Series

LxWxD: 1.0 x 0.5 x 0.9mm

1608 Series

1.6×0.8×0.4mm 1.6×0.8×0.6mm 1.6×0.8×0.7mm 1.6×0.8×0.8mm

2012 Series

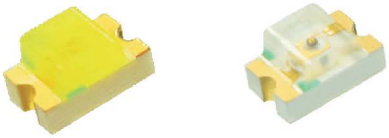

LxWxD: 2.0 x 1.2 x 1.1mm

3215 Series

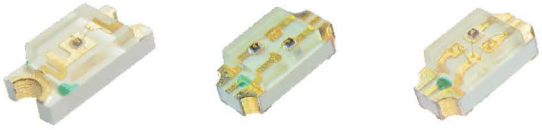

single color Bi color full color

LxWxD: 3.2 x 1.5 x 1.1mm

2. Some applications include signal indications such as home appliance indication, mobile phone backlight, and automobile dash board.

Home appliance indicator

Digital camera backlight

Automobile dash board backlight

3. Features: small size, high light intensity, wide viewing angle, good reliability and long lifespan.

CHIP LED

1005 Series

1005 Series

Outline Dimensions/ Unit: mm

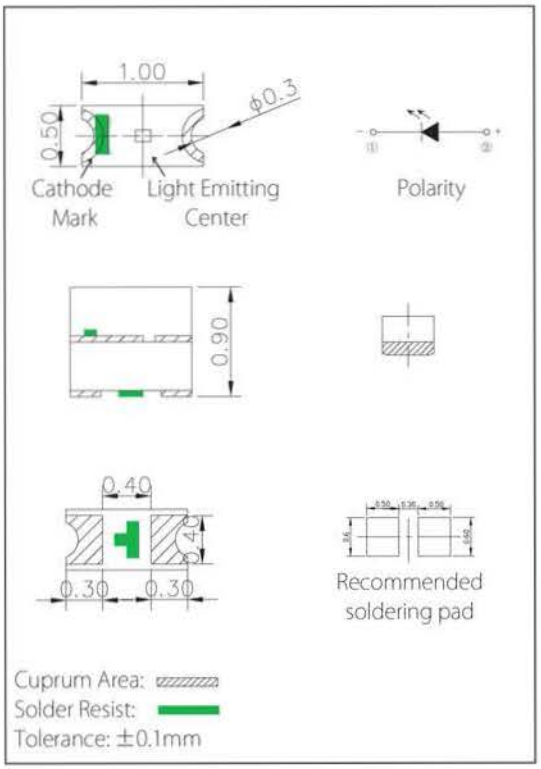

Features

- Thickness: 0.9mm;
- Features: small size, high light intensity, wide viewing angle, good reliability, long lifespan;
- Suitable for unleaded reflow soldering process;
- Environment-friendly products, complied with RoHS;
- Mainly used for signal indication such as home appliance indicator, mobile phone backlight and automobile dash board.

Absolute Maximum Ratings:

Parameter	Symbol	Rating
Forward Current	I_F	20mA
Pulse Forwards Current	I_{FP}	100mA
Reverse Voltage	V_R	5V
Working Temperature	T_{OPR}	-30~+85℃
Storage Temperature	T_{STG}	-40~+100℃

• Pulse Width≤0.1ms, Duty Cycle≤1/10

Parameter/Ta=25℃:

Part Number	Color	I_F(mA) TEST	λ_D(nm)/XY Typ.	I_V (mcd) Typ.	V_F (V)	
					Typ.	Max
VO-FC-1005HRK-620D	Red	15	620	120	2.0	2.6
VO-FC-1005HOK-600H	Orange	15	605	150	2.0	2.6
VO-FC-1005HYK-588J	Yellow	15	588	150	2.0	2.6
VO-FC-1005HGK-572C	Yellowish Green	15	572	30	2.0	2.6
VO-FC-1005UGK-520D	Green	15	520	500	3.2	3.6
VO-FC-1005BK-470D	Blue	15	470	100	3.2	3.6
VO-FC-1005WD-460X	White	15	0.26	500	3.2	3.6

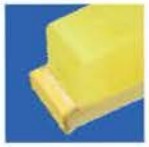

CHIP LED

1608(0603) Shiny-Color Series

1608 Series

Outline Dimensions/Unit: mm

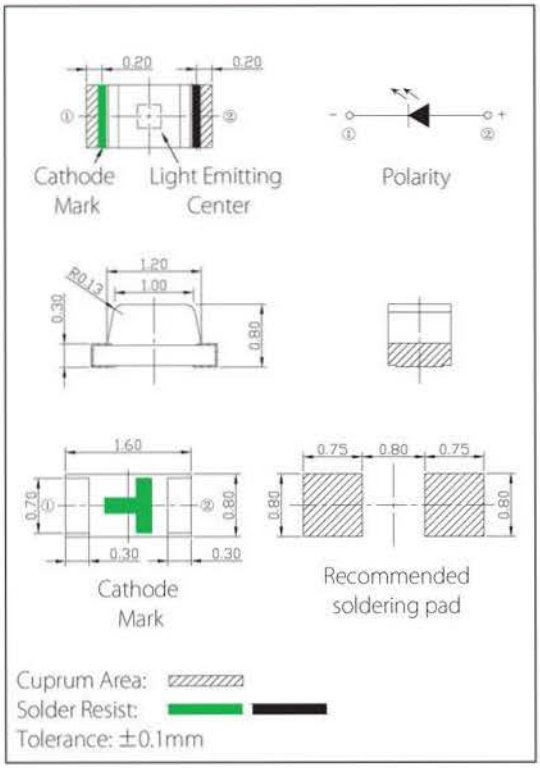

Features

- Thickness: 0.8mm
- Features: small size, high light intensity, wide viewing angle, good reliability, long lifespan.
- Suitable for unleaded reflow soldering process.
- Environment-friendly products, complied with RoHS.
- Mainly used for signal indication such as home appliance indicator, mobile phone backlight and automobile dash board.

Absolute Maximum Ratings:

Parameter	Symbol	Rating
Forward Current	I_F	20mA
Pulse Forwards Current	I_{FP}	100mA
Reverse Voltage	V_R	5V
Working Temperature	T_{OPR}	-30~+85℃
Storage Temperature	T_{STG}	-40~+100℃

• Pulse Width≤0.1ms, Duty Cycle≤1/10

Parameter/Ta=25℃:

Part Number	Color	I_F(mA) TEST	λ_D(nm)/XY Typ.	I_V (mcd) Typ.	V_F (V)	
					Typ.	Max
VO-FC-1608WBD-460M	Blue	20	X=0.16 Y=0.15	360	3.0	3.6
VO-FC-1608WPD-462M	Pink	20	X=0.30 Y=0.16	130	3.0	3.6

CHIP LED

1608(0603) Ultrathin Series

T1608 Series

F1608 Series

Outline Dimensions/ Unit: mm

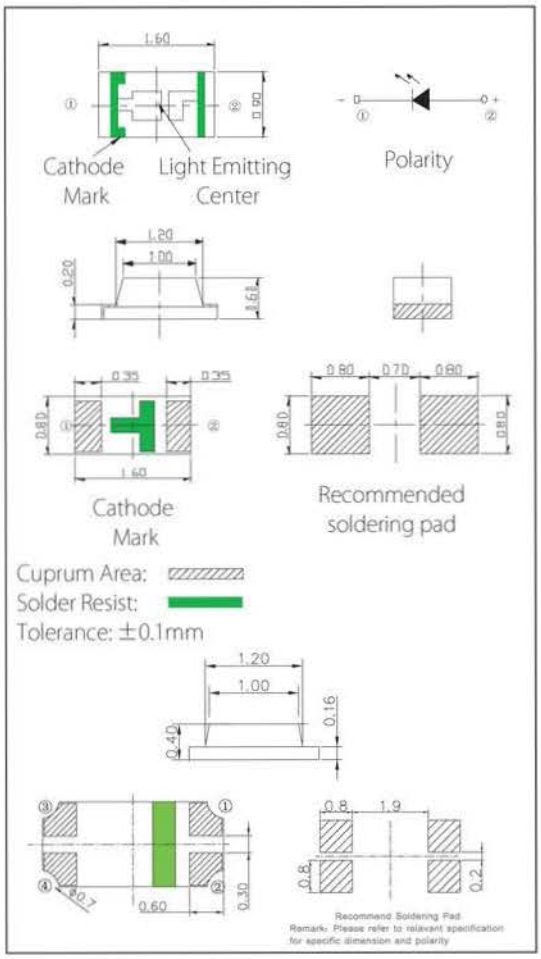

Features

- Thickness: 0.4mm(F1608 series), 0.6mm (T1608 series);
- Color: red, orange, yellow, green, blue and white;
- Features: small size, high light intensity, wide viewing angle, good reliability and long lifespan;
- Suitable for unleaded reflow soldering process;
- Environment-friendly products and complied with RoHS;
- Mainly used for signal indication such as home appliance indicator, mobile phone backlight and automobile dash board.

Absolute Maximum Ratings:

Parameter	Symbol	Rating
Forward Current	I_F	20mA
Pulse Forwards Current	I_{FP}	100mA
Reverse Voltage	V_R	5V
Working Temperature	T_{OPR}	-30~+85℃
Storage Temperature	T_{STG}	-40~+100℃

• Pulse Width≤0.1ms, Duty Cycle≤1/10

Parameter/Ta=25℃:

Part Number	Color	I_F(mA) TEST	λ_D(nm)/XY Typ.	I_V (mcd) Typ.	V_F (V)	
					Typ.	Max
VO-FC-F1608WBX(5)-460D	white	5	X=0.26 Y=0.21	140	3.0	3.6
VO-FC-F1608UGK-515D5	Green	5	525	200	3.0	3.6
VO-FC-F1608BK-470H5	Blue	5	470	40	3.0	3.6
VO-FC-T1608SXK-620H08	Red	20	620	150	2.0	2.6

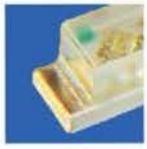

CHIP LED

1608 (0603) General Size Series

1608 Series

Features

- Thickness: 0.8mm;
- Color: red, orange, yellow, green, blue, infrared and white;
- Features: small size, high light intensity, wide viewing angle, good reliability and long lifespan.
- Suitable for unleaded reflow soldering process;
- Environment-friendly products and complied with RoHS;
- Mainly used for signal indication such as home appliance indicator and automobile dash board.

Outline Dimensions/ Unit: mm

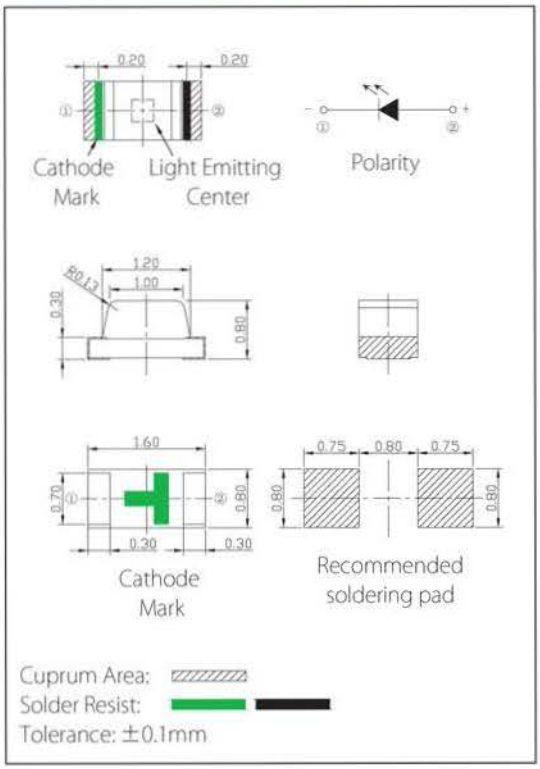

Absolute Maximum Ratings:

Parameter	Symbol	Rating
Forward Current	I_F	20mA
Pulse Forwards Current	I_{FP}	100mA
Reverse Voltage	V_R	5V
Working Temperature	T_{OPR}	-30~+85℃
Storage Temperature	T_{STG}	-40~+100℃

• Pulse Width≤0.1ms, Duty Cycle≤1/10

Parameter/Ta=25℃:

Part Number	Color	I_F(mA) TEST	λ_D(nm)/XY Typ.	I_V (mcd) Typ.	V_F (V)	
					Typ.	Max
VO-FC-1608WD3-457XE	White	20	X=0.23 Y=0.20	500	3.0	3.6
VO-FC-1608SXK-620D08	Red	20	620	115	2.0	2.6
VO-FC-1608YOEK-605C	Orange	20	605	100	2.0	2.6
VO-FC-1608YXK-585H08	Yellow	15	590	100	2.0	2.6
VO-FC-1608GEK-572E	Yellowish Green	15	572	45	2.0	2.6
VO-FC-1608UGK-520D	Green	20	520	500	3.0	3.6
VO-FC-1608BK-470ME-XF	Blue	20	470	200	3.2	4.0

CHIP LED

DA1608 Series

DA1608 Series

Outline Dimensions/ Unit: mm

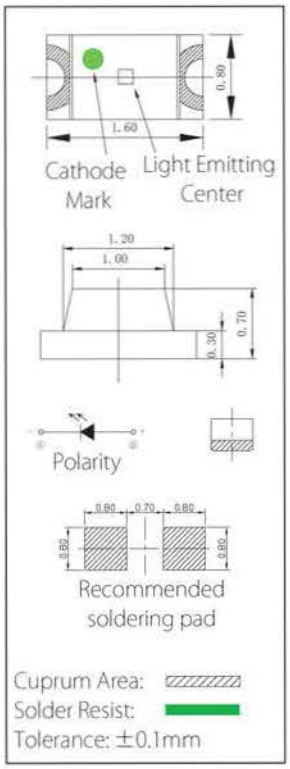

Features

- Thickness: 0.7mm;
- Color: red, orange, yellow, green, blue, infrared and white;
- Features: small size, high light intensity, wide viewing angle, good reliability and long lifespan.
- Suitable for unleaded reflow soldering process;
- Environment-friendly products and complied with RoHS;
- Mainly used for signal indication such as home appliance indicator and automobile dash board.

Absolute Maximum Ratings:

Parameter	Symbol	Rating
Forward Current	I_F	20mA
Pulse Forwards Current	I_{FP}	100mA
Reverse Voltage	V_R	5V
Working Temperature	T_{OPR}	-30~+85℃
Storage Temperature	T_{STG}	-40~+100℃

• Pulse Width≤0.1ms, Duty Cycle≤1/10

Parameter/Ta=25℃:

Part Number	Color	I_F(mA) TEST	λ_D(nm)/XY Typ.	I_V (mcd) Typ.	V_F (V)	
					Typ.	Max
VO-FC-DA1608HRK-620D	Red	20	620	100	2.0	2.6
VO-FC-DA1608HOK-600H	Orange	20	605	150	2.0	2.6
VO-FC-DA1608HYK-588J	Yellow	20	588	100	2.0	2.6
VO-FC-DA1608HGK-572C	Yellowish Green	20	572	30	2.0	2.6
VO-FC-DA1608UGK-520D10	Green	10	520	500	3.2	3.6
VO-FC-DA1608BK-470H10	Blue	10	470	100	3.2	3.6
VO-FC-DA1608WD-460H5	White	5	0.28	200	3.0	3.6

CHIP LED

2012(0805) Series

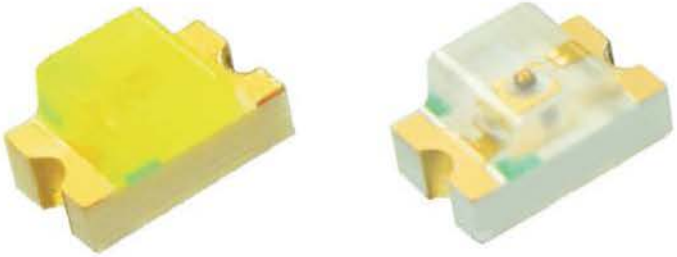

2012 Series

Outline Dimensions/ Unit: mm

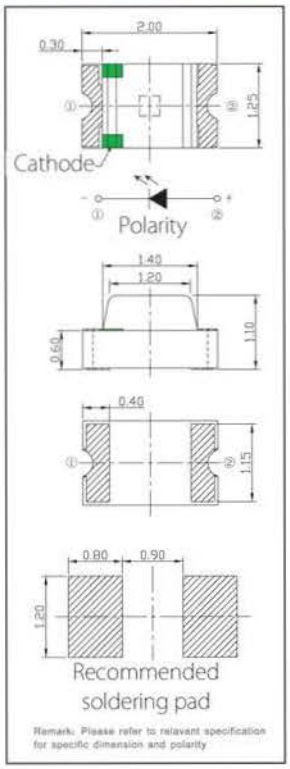

Tolerance: ±0.1mm

Features

- Thickness: 1.1mm;
- Color: red, orange, yellow, green, blue and white;
- Features: small size, high light intensity, wide viewing angle, good reliability and long lifespan;
- Suitable for unleaded reflow soldering process;
- Environment-friendly products and complied with RoHS;
- Mainly used for display and signal indication such as home appliance indicator, mobile phone backlight and automobile dash board.

Absolute Maximum Ratings:

Parameter	Symbol	Rating
Forward Current	I_F	20mA
Pulse Forwards Current	I_{FP}	100mA
Reverse Voltage	V_R	5V
Working Temperature	T_{OPR}	-30~+85℃
Storage Temperature	T_{STG}	-40~+100℃

• Pulse Width≤0.1ms, Duty Cycle≤1/10

Parameter/Ta=25℃:

Part Number	Color	I_F(mA) TEST	λ_D(nm)/XY Typ.	I_V (mcd) Typ.	V_F (V)	
					Typ.	Max
VO-FC-2012WBY-460G	white	20	X=0.28 Y=0.28	700	3.0	3.6
VO-FC-2012HRK-620D	Red	20	620	100	2.0	2.6
VO-FC-2012YOXK-600H08	Orange	20	602	160	2.0	2.6
VO-FC-2012HYK-588J	Yellow	20	588	125	2.0	2.6
VO-FC-2012GHK-570A08	Yellowish Green	20	572	35	2.0	2.6
VO-FC-2012UGK-520D5	Green	5	525	250	3.0	3.6
VO-FC-A2012BK-470H12	Blue	12	470	124	2.8	3.4

CHIP LED

3215(1206) Series

3215 Series

Features

- Color: red, orange, yellow,green, blue and white;
- Features: small size, high light intensity, wide viewing angle, good reliability and long lifespan;
- Suitable for unleaded reflow soldering process;
- Environment-friendly products and complied with RoHS;
- Mainly used for display and sign indication.

Outline Dimensions/ Unit: mm

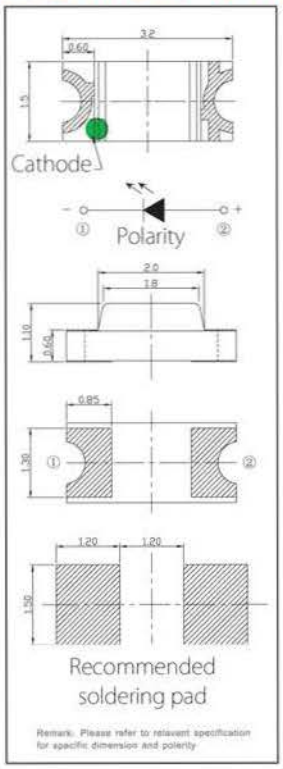

Tolerance: ±0.1mm

Absolute Maximum Ratings:

Parameter	Symbol	Rating
Forward Current	I_F	20mA
Pulse Forwards Current	I_{FP}	100mA
Reverse Voltage	V_R	5V
Working Temperature	T_{OPR}	-30~+85℃
Storage Temperature	T_{STG}	-40~+100℃

• Pulse Width≤0.1ms, Duty Cycle≤1/10

Parameter/Ta=25℃:

Part Number	Color	I_F(mA) TEST	λ_D(nm)/XY Typ.	I_V (mcd) Typ.	V_F (V)	
					Typ.	Max
VO-FC-3215HRK-620D	Red	20	620	115	2.0	2.6
VO-FC-3215YOXK-600H08	Orange	20	602	150	2.0	2.6
VO-FC-3215YXK-585F08	Yellow	20	590	100	2.0	2.6
VO-FC-3215GHK-570A08	Yellowish Green	20	572	35	2.0	2.6

CHIP LED

3215(1206) Series

3215 Series

Features

- Color: red, orange, yellow,green, blue and white;
- Features: small size, high light intensity, wide viewing angle, good reliability and long lifespan;
- Suitable for unleaded reflow soldering process;
- Environment-friendly products and complied with RoHS;
- Mainly used for display and sign indication.

Outline Dimensions/ Unit: mm

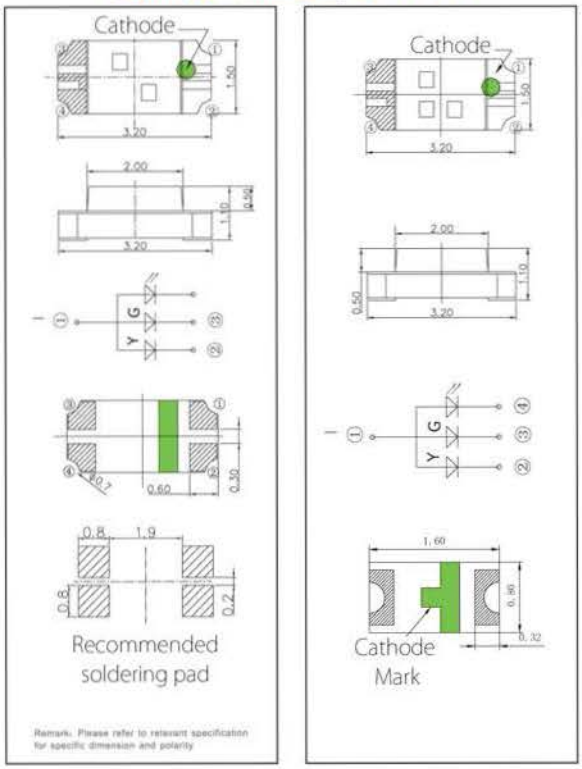

Tolerance: ±0.1mm

Absolute Maximum Ratings:

Parameter	Symbol	Rating
Forward Current	I_F	20mA
Pulse Forwards Current	I_{FP}	100mA
Reverse Voltage	V_R	5V
Working Temperature	T_{OPR}	-30~+85℃
Storage Temperature	T_{STG}	-40~+100℃

• Pulse Width≤0.1ms, Duty Cycle≤1/10

Parameter/Ta=25℃:

Part Number	Color	I_F(mA) TEST	λ_D(nm)/XY Typ.	I_V (mcd) Typ.	V_F (V)	
					Typ.	Max
VO-FC-3215UGK-520D	Green	20	520	600	3.0	3.6
VO-FC-3215BXK-465D	Blue	20	470	120	3.0	3.6
VO-FC-3215SQGEK(Bi-color)	Red	20	620	180	2.0	2.6
	Yellowish Green	20	572	50	2.0	2.6

Brief Introduction of TOP LED

1. VAOPTO TOP LED series includes the 3020, 3528, and 5050 series. Each series offer various colors such as red, organge, yellow, green, blue, etc.

3020 Series
LxWxD: 3.0 x 2.0 x 1.3mm

3528 Series
LxWxD: 3.5 x 2.8 x 1.9mm

5050 Series
LxWxD: 5.0 x 5.0 x 1.6mm

2. Some applications include sign indicator, backlighting, and decorative lighting.

LED Strips

LED Tubes

LED Signs and Channel Letters

3. Features: small size, high light intensity, wide viewing angle, god reliability, and long lifespan.

TOP LED
3020 Series

3020 Series

Features

- Color: red, orange, yellow, green, blue and etc. ;
- Suitable for unleaded reflow soldering process;
- Environment-friendly products, and complied with RoHS;
- Mainly used for automobile dash board backlight and various kinds of decorative lighting.

Outline Dimensions/ Unit: mm

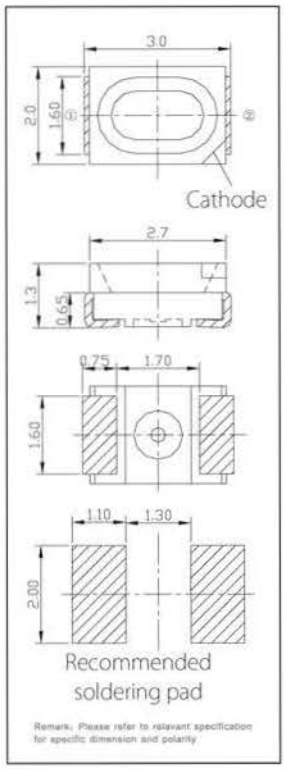

Tolerance: ±0.1mm

Absolute Maximum Ratings:

Parameter	Symbol	Rating
Forward Current	I_F	20mA
Pulse Forwards Current	I_{FP}	100mA
Reverse Voltage	V_R	5V
Working Temperature	T_{OPR}	-30~+85℃
Storage Temperature	T_{STG}	-40~+100℃

• Pulse Width≤0.1ms, Duty Cycle≤1/10

Parameter/Ta=25℃:

Part Number	Color	I_F(mA) TEST	λ_D(nm)/XY Typ.	I_V (mcd) Typ.	V_F (V)	
					Typ.	Max
VO-FM-3020HRS-624N	Red	20	630	680	2.2	2.4
VO-FM-3020HYK-589M	Yellow	20	590	800	2.0	2.4
VO-FM-3020GEK-572G	Yellowish Green	20	572	180	2.0	2.4
VO-FM-3020BK-460TS	Blue	15	465	400	3.0	3.2

TOP LED

3528 Series

3528 Series

Features

- Color: red, orange, yellow, green, blue and etc.
- Suitable for unleaded reflow soldering process.
- Environment-friendly products and complied with RoHS.
- Mainly used for automobile dash board backlight, displays and various kinds of decorative lighting.

Absolute Maximum Ratings:

Parameter	Symbol	Rating
Forward Current	I_F	20mA
Pulse Forwards Current	I_{FP}	100mA
Reverse Voltage	V_R	5V
Working Temperature	T_{OPR}	-30~+85℃
Storage Temperature	T_{STG}	-40~+100℃

• Pulse Width≤0.1ms, Duty Cycle≤1/10

Outline Dimensions/ Unit: mm

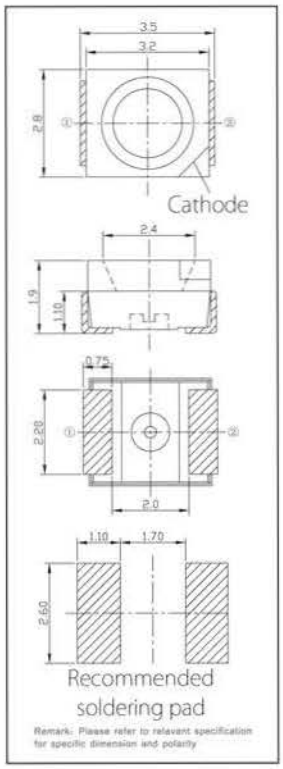

Tolerance: ±0.1mm

Parameter/Ta=25℃:

Part Number	Color	I_F(mA) TEST	λ_D(nm)/XY Typ.	I_V (mcd) Typ.	V_F (V)	
					Typ.	Max
VO-FM-3528SXK-620H08	Red	20	625	300	2.0	2.4
VO-FM-3528HOK-605QC	Orange	20	605	350	2.0	2.6
VO-FM-3528HYK-589N	Yellow	20	590	800	2.0	2.4
VO-FM-3528GEK-572G	Yellowish Green	20	572	150	2.0	2.4
VO-FM-3528UGK-520D	Green	20	525	1600	3.0	3.6
VO-FM-3528BK-470D	Blue	20	470	350	3.0	3.6
VO-FM-3528SEGEK-1	Red	20	624	120	2.0	2.6
	Yellowish Green	20	572	120	2.0	2.6

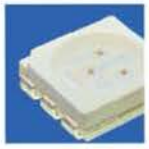

TOP LED
5050 Series

5050 Series

Features

- Color: red, orange, yellow, green, blue and etc.;
- Suitable for unleaded reflow soldering process;
- Environment-friendly products and complied with RoHS;
- Mainly used for automobile dash board backlight, displays, strips and various kinds of decorative lighting.

Outline Dimensions/ Unit: mm

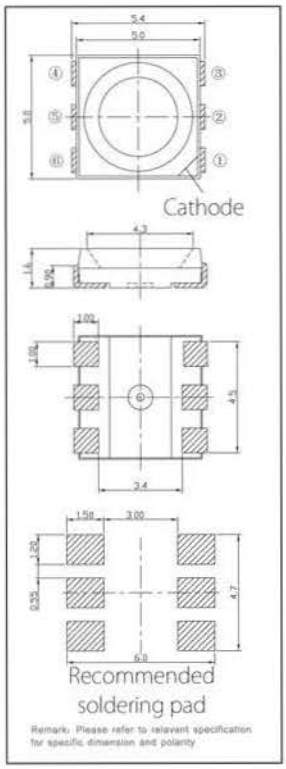

Tolerance: ±0.1mm

Absolute Maximum Ratings:

Parameter	Symbol	Rating
Forward Current	I_F	60mA
Pulse Forwards Current	I_{FP}	100mA
Reverse Voltage	V_R	5V
Working Temperature	T_{OPR}	-30~+85℃
Storage Temperature	T_{STG}	-40~+100℃

• Pulse Width≤0.1ms, Duty Cycle≤1/10

Parameter/Ta=25℃:

Part Number	Color	I_F(mA) TEST	λ_D(nm)/XY Typ.	I_V (mcd) Typ.	V_F (V)	
					Typ.	Max
VO-FM-T5050HRK-624N	Red	60	624	2400	2.0	2.4
VO-FM-T5050HYK-589N	Yellow	60	592	2500	2.0	2.4
VO-FM-T5050UGK-520D	Green	60	525	4300	3.0	3.6
VO-FM-T5050BK-470M	Blue	60	470	1400	3.0	3.6

Brief Introduction of LAMP LED

1. VAOPTO Lamp LED series include various specifications such as Φ3 and Φ5 series. Each series offer differnt colors such as red, orange yellow, green, blue, white, and infrared.

Φ 3 Series

Φ 5 Series

2. Some applications include signal indication and decorative lighting.

Traffic light

Flashlight

3. Features: high light intensity, god reliability, waterproof, and long lifespan.

LAMP LED

LAMP LED Series

Φ3 Series

Φ5 Series

Outline Dimensions/ Unit: mm

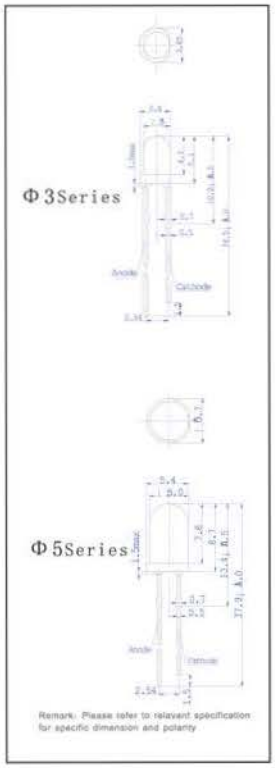

Tolerance: ±0.1mm

Features

- Diameter: 3mm (Φ3), 5mm (Φ5), with various viewing angles;
- Color: red, yellow, green, blue, white and infrared;
- Environment-friendly products and complied with RoHS;
- Mainly used for signal indication and decorative lighting.

Absolute Maximum Ratings:

Parameter	Symbol	Rating
Forward Current	I_F	75mA
Pulse Forwards Current	I_{FP}	100mA
Reverse Voltage	V_R	5V
Working Temperature	T_{OPR}	-30~+85℃
Storage Temperature	T_{STG}	-40~+100℃

• Pulse Width≤0.1ms, Duty Cycle≤1/10

Parameter/Ta=25℃:

Part Number	Color	I_F(mA) TEST	λ_D(nm)/XY Typ.	I_V (mcd) Typ.	θ (°) Typ.	V_F (V)	
						Typ.	Max
VO-BT-202SEK-31-624H	Red	20	624	800	50	2.0	2.6
VO-BT-102GEK-31-572D	Yellowish Green	20	572	200	30	2.0	2.6
VO-BT-904BEK-31-460M-A6	white	20	X=0.3 Y=0.3	17000	12	3.2	4.5

Brief Introduction of LED Module

1. VAOPTO LED applied products include display modules, device backlights, and other customized products.

Display Module Series

Backlight Series

2. Some applications include backlighting for household appliances such as air-conditioner, water heater, digital player, etc.

Air-conditioner

Mobile phone

3. Features: bright colors, novel structure (appearance patented), low power, good reliability, and long lifespan.

LED Module

Display Module Series

Display Module Series

Features

- Features: bright colors, novel structure, low power and long lifespan
- Color: white, red, orange, yellow, green, blue and white;
- Mainly used for household appliances such as air-conditioner water heater, digital player and etc.

Outline Dimensions/ Unit: mm

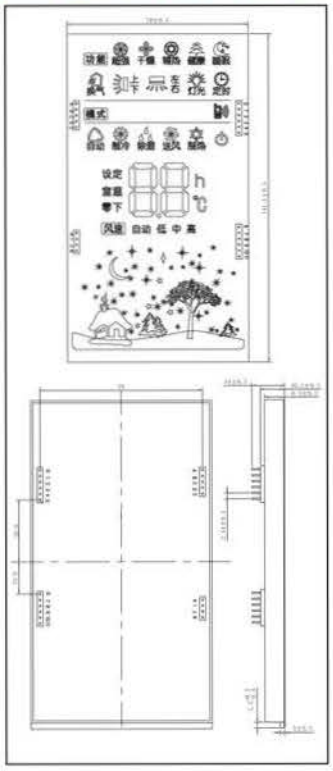

Absolute Maximum Ratings:

Parameter	Symbol	Rating
Forward Current	I_F	20mA
Pulse Forwards Current	I_{FP}	80mA
Reverse Voltage	V_R	5V
Working Temperature	T_{OPR}	-20~+60℃
Storage Temperature	T_{STG}	-25~+75℃

• Pulse Width≤0.1ms, Duty Cycle≤1/10

Parameter/Ta=25℃:

Part Number	Color	I_F(mA) TEST	λ_D(nm)/XY Typ.	I_V (mcd) Typ.	V_F (V)	
					Typ.	Max
VO-D310F33	Red	20	624	80	2.0	2.6
	white	20	X=0.275 Y=0.295	400	3.0	3.6

LED Module

LED Backlight Modules Series

LEDBacklight Series

Features

- Customized design is acceptable;
- Mainly used for backlight of LED display such as mobile phone, game machine, MP4 and etc.

Outline Dimensions/ Unit: mm

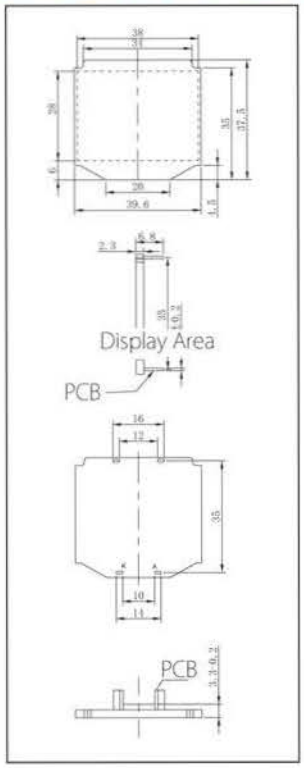

Absolute Maximum Ratings:

Parameter	Symbol	Rating
Forward Current	I_F	20×3 mA
Pulse Forwards Current	I_{FP}	60×3 mA
Reverse Voltage	V_R	5V
Working Temperature	T_{OPR}	-20~+70℃
Storage Temperature	T_{STG}	-30~+80℃

• Pulse Width≤0.1ms, Duty Cycle≤1/10

Parameter/Ta=25℃:

Part Number	Color	I_F(mA) TEST	λ_D(nm) Typ.	L_V (cd/m²) Typ.	V_F (V)	
					Typ.	Max
VO-FBL-1608YEK3AV (MD)	Yellow	10×3	590	20	2.0	2.6

RGB LED

1. VALOTP RGB LED series include the 2020, 3528, 3535, and 5050 series with various brightnes levels.

B1010

B1515

B2020

B2724

B3528

3528

N3535

H5050

5050

2. Some applications include indoor displays, semi-outdoor displays, and other decorative illuminations.

Indoor LED Display

Outdoor LED Display

3. Features: bright color, waterproof, high contrast ratio, easy to control, god reliability, and long lifespan.

Recommendations for VAOPTO RGB LED Aplications

(unit: mm)

Display and Decoration	Precise Application	Recommended VAOPTO RGB LEDs & Dimensions			
Indoor	<P2	B1010	1.1×1.0×0.9		
	P2-P3	B1515	1.6×1.5×1.0		
	P3-P4	B2020	2.1×2.1×1.0		
	P4-P5	B2724	2.7×2.4×1.0		
	P5-P8	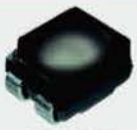 B3528	3.5×2.8×1.9	3528	3.5×2.8×1.9
Outdoor	P5-P10	N3535	3.7×3.5×2.8	B3535	3.7×3.5×2.8
	P8-P12	H5050	5.4×5.0×2.8		
Decoration	-	5050	5.4×5.0×1.6		

CHIP RGB LED

Indoor & High Density Display B1010 Series

Core LED

B1010 Series

Outline Dimensions/Unit: mm

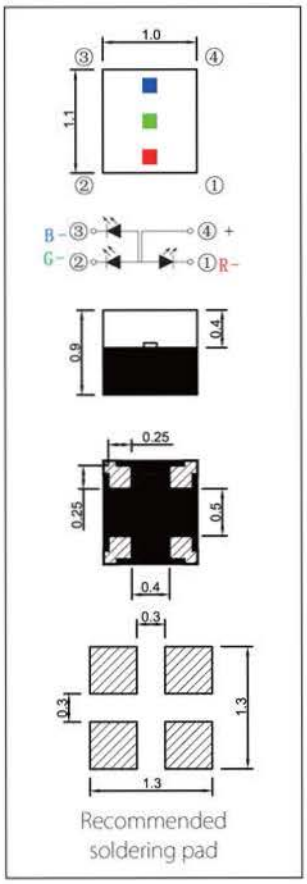

Tolerance: ±0.1mm

Features

- Small size SMD RGB LED;
- Two series: Normal epoxy package ,high brightness; Black epoxy package, high contrast ratio;
- Small size, light weight,P1.5;
- Wide viewing angle, soft light and good consistency;
- Good heat dissipation, long lifespan ,high reliability;
- Apply to indoor displays and decorative illuminates.

Absolute Maximum Ratings :

Parameter	Symbol	Rating
Forward Current	I_F	20mA
Pulse Forwards Current	I_{FP}	100mA
Reverse Voltage	V_R	5V
Working Temperature	T_{OPR}	-30~+85℃
Storage Temperature	T_{STG}	-40~+100℃

• Pulse Width≤0.1ms, Duty cycle≤1/10

Parameter/Ta=25℃:

Level	Part Number	Color	I_F(mA) TEST	λ_D(nm)/XY Typ.	I_V (mcd) Typ.	V_F (V) Typ.	View angle (deg.)
Normal Epoxy Package	VO-FC-B1010RGBW-HG		8	620	90	2.0	150
			5	520	180	3.0	150
			3	470	30	3.0	150
Black Epoxy Package	VO-FC-B1010RGBY-HG		8	620	75	2.0	150
			5	520	140	3.0	150
			3	470	20	3.0	150

TOP RGB LED

Indoor & High Density & High Contrast Ratio B1515 Series

Quasar LED

B1515 Series

Outline Dimensions/Unit: mm

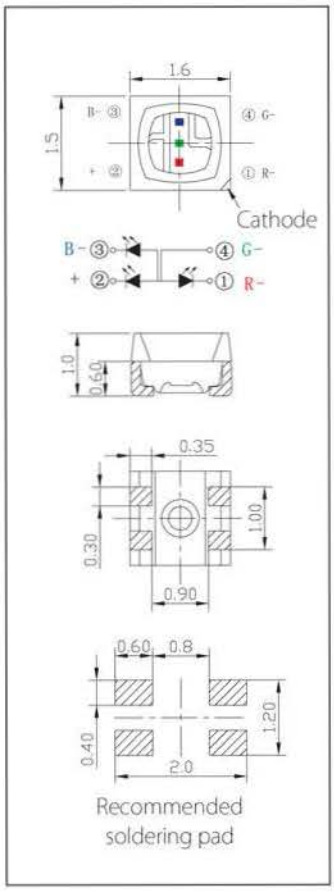

Tolerance : ±0.1mm

Features

- Small size TOP SMD RGB LED;
- Two series: Diffusing encapsulation with epoxy resin ,high brightness; Black encapsulation with epoxy resin package, high contrast ratio;
- Small size, light weight,P1.5;
- Wide viewing angle, soft light and good consistency;
- Good heat dissipation, long lifespan ,high reliability;
- Apply to indoor display and other decoration lighting.

Absolute Maximum Ratings :

Parameter	Symbol	Rating
Forward Current	I_F	20mA
Pulse Forwards Current	I_{FP}	100mA
Reverse Voltage	V_R	5V
Working Temperature	T_{OPR}	-30~+85℃
Storage Temperature	T_{STG}	-40~+100℃

• Pulse Width≤0.1ms, Duty cycle≤1/10

Parameter/Ta=25℃:

Level	Part Number	Color	I_F(mA) TEST	λ_D(nm)/XY Typ.	I_V (mcd) Typ.	V_F (V) Typ.	View angle (deg.)
Normal Epoxy Package	VO-FM-B1515RGBW-HG		15	620	120	2.0	120
			8	520	350	3.0	120
			5	470	55	3.0	120
Black Epoxy Package	VO-FM-B1515RGBY-HG		15	620	100	2.0	120
			8	520	290	3.0	120
			5	470	45	3.0	120

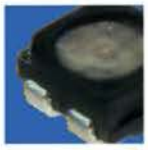

TOP RGB LED

High Density & High Contrast Ratio B2020 Series

B2020 Series

Outline Dimensions/Unit: mm

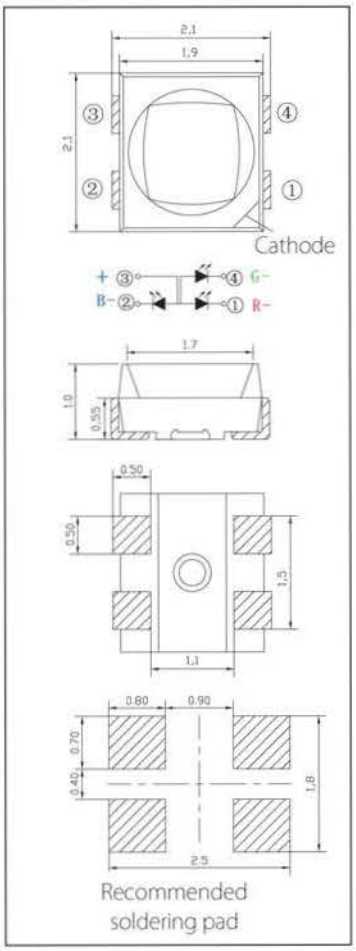

Tolerance: ±0.1mm

Features

- Black frame, high contrast ratio and colorful.
- Diffusing encapsulation with epoxy resin, wide viewing angle, soft light and good conformity.
- Small size, light weight, P3.0 available, better thermal dissipation, high reliability and long lifespan.
- Apply to indoor displays and decorative illuminates.

Absolute Maximum Ratings :

Parameter	Symbol	Rating
Forward Current	I_F	20mA
Pulse Forwards Current	I_{FP}	100mA
Reverse Voltage	V_R	5V
Working Temperature	T_{OPR}	-30~+85℃
Storage Temperature	T_{STG}	-40~+100℃

• Pulse Width≤0.1ms, Duty cycle≤1/10

Parameter/Ta=25℃:

Part Number	Color	I_F(mA) TEST	λ_D(nm)/XY Typ.	I_V (mcd) Typ.	V_F (V) Typ.	View angle (deg.)
VO-FM-B2020RGBW-HG		15	620	125	2.0	110
		8	520	380	3.0	110
		5	470	75	3.0	110

TOP RGB LED

High Density & High Contrast Ratio B2724 Series

B2724 Series

Outline Dimensions/Unit: mm

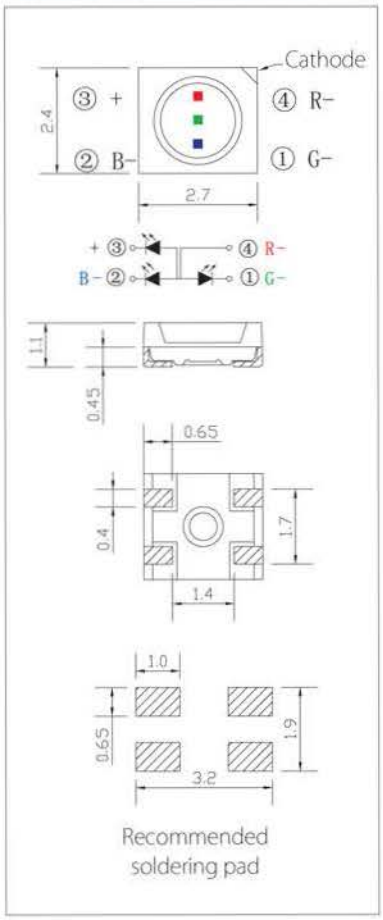

Tolerance: ±0.1mm

Features

- Black frame, high contrast ratio and colorful.
- Diffusing encapsulation with epoxy resin, wide viewing angle, soft light and good conformity.
- Small size, light weight, better thermal dissipation, high reliability and long lifespan.
- Apply to indoor displays and decorative illuminates.

Absolute Maximum Ratings :

Parameter	Symbol	Rating
Forward Current	I_F	20mA
Pulse Forwards Current	I_{FP}	100mA
Reverse Voltage	V_R	5V
Working Temperature	T_{OPR}	-30~+85℃
Storage Temperature	T_{STG}	-40~+100℃

• Pulse Width≤0.1ms, Duty cycle≤1/10

Parameter/Ta=25℃:

Part Number	Color	I_F(mA) TEST	λ_D(nm)/XY Typ.	I_V (mcd) Typ.	V_F (V) Typ.	View angle (deg.)
VO-FM-B2724RGBW-HG		15	620	130	2.0	130
		8	525	350	3.0	130
		5	470	60	3.0	130

TOP RGB LED

Indoor & High Contrast Ratio B3528 Series

B3528 Series

Outline Dimensions/Unit: mm

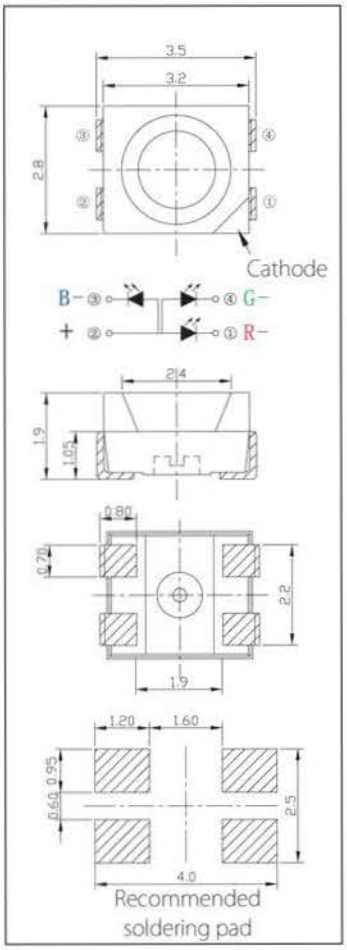

Tolerance: ±0.1mm

Features

- Black frame, high contrast ratio and colorful;
- Diffusing encapsulation with epoxy resin, wide viewing angle, soft light and good conformity;
- High brightness, high reliability, long lifespan and easy to control;
- Apply to indoor displays and decorative illuminates.

Absolute Maximum Ratings :

Parameter	Symbol	Rating
Forward Current	I_F	20mA
Pulse Forwards Current	I_{FP}	100mA
Reverse Voltage	V_R	5V
Working Temperature	T_{OPR}	-30~+85℃
Storage Temperature	T_{STG}	-40~+100℃

• Pulse Width≤0.1ms, Duty cycle≤1/10

Parameter/Ta=25℃:

Level	Part Number	Color	I_F(mA) TEST	λ_D(nm)/XY Typ.	I_V (mcd) Typ.	V_F (V) Typ.	View angle (deg.)
High Red Brightness	VO-FM-B3528RGBW-HG-Z		20	620	160	2.0	110
			12	520	450	3.0	110
			12	470	100	3.0	110
High Brightness	VO-FM-B3528RGBW-SG		20	620	330	2.0	110
			12	520	500	3.0	110
			12	470	110	3.0	110

TOP RGB LED

General Indoor 3528 Series

3528 Series

Outline Dimensions/Unit: mm

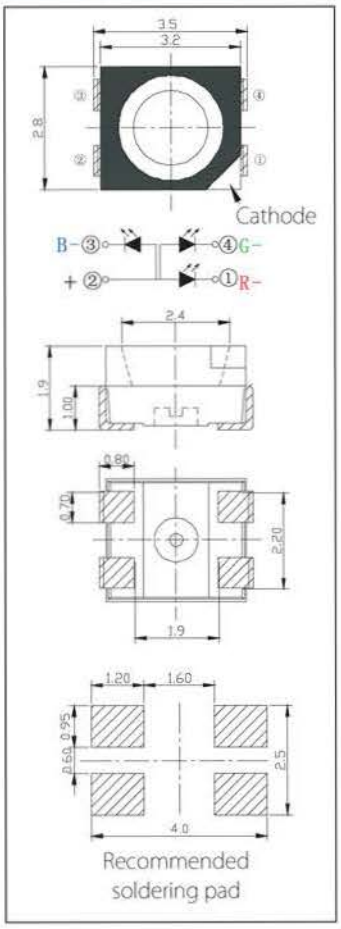

Tolerance: ±0.1mm

Features

- White frame with black surface, high brightness and high contrast ratio;
- Transparent encapsulation with epoxy resin, wide viewing angle, high reliability and good conformity;
- High brightness, high reliability and long lifespan;
- Apply to indoor displays and decorative illuminates.

Absolute Maximum Ratings :

Parameter	Symbol	Rating
Forward Current	I_F	20mA
Pulse Forwards Current	I_{FP}	100mA
Reverse Voltage	V_R	5V
Working Temperature	T_{OPR}	-30~+85℃
Storage Temperature	T_{STG}	-40~+100℃

• Pulse Width≤0.1ms, Duty cycle≤1/10

Parameter/Ta=25℃:

Level	Part Number	Color	I_F(mA) TEST	λ_D(nm)/XY Typ.	Iv (mcd) Typ.	V_F (V) Typ.	View angle (deg.)
Standard Brightness	VO-FM-3528RGBK-HG		20	620	275	2.0	110
			12	520	900	3.0	110
			12	470	180	3.0	110
High Red Brightness	VO-FM-3528RGBK-SG		20	620	600	2.0	110
			12	520	900	3.0	110
			12	470	180	3.0	110

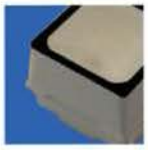

TOP RGB LED

Outdoor & High Waterproofness N3535 Loong Series

N3535 LOONG Series

Outline Dimensions/Unit: mm

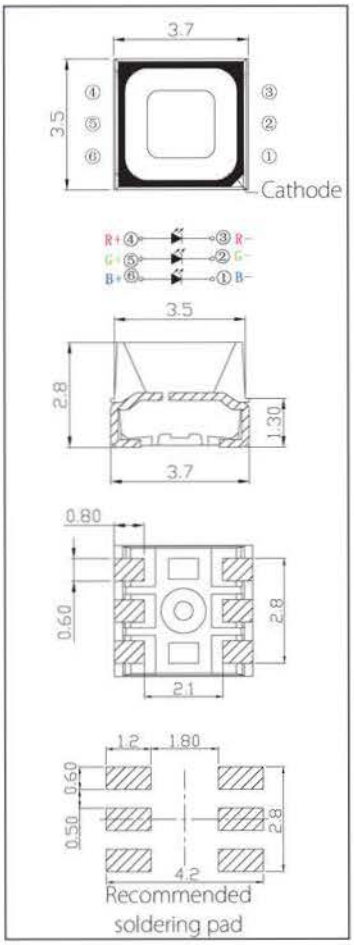

Tolerance: ±0.1mm

Features

- Optimal patented structure with high frame and short pins, suitable for glue-injection and lamp mask design;
- Dust proof, waterproof and UV proof;
- Compact package and apply to high density outdoor display of P5-P10;
- Apply to outdoor / semi-outdoor displays and other decorative illuminations.

Absolute Maximum Ratings :

Parameter	Symbol	Rating
Forward Current	I_F	25mA
Pulse Forwards Current	I_{FP}	100mA
Reverse Voltage	V_R	5V
Working Temperature	T_{OPR}	-30~+85℃
Storage Temperature	T_{STG}	-40~+100℃

• Pulse Width≤0.1ms, Duty cycle≤1/10

Parameter/Ta=25℃:

Level	Part Number	Color	I_F(mA) TEST	λ_D(nm)/XY Typ.	Iv (mcd) Typ.	V_F (V) Typ.	View angle (deg.)
Standard Brightness	VO-FM-N3535RGBW-SH		20	620	650	2.0	110
			20	520	1650	3.0	110
			20	470	450	3.0	110
High Brightness	VO-FM-N3535RGBW-WQ		20	620	1000	2.0	110
			20	520	2300	3.0	110
			20	470	550	3.0	110
Ultra-high Brightness	VO-FM-N3535RGBW-WT		20	620	1200	2.0	110
			20	520	2800	3.0	110
			20	470	650	3.0	110

TOP RGB LED

Outdoor & High Contrast Ratio & High Waterproofness B3535 Series

B3535 Series

Outline Dimensions/Unit: mm

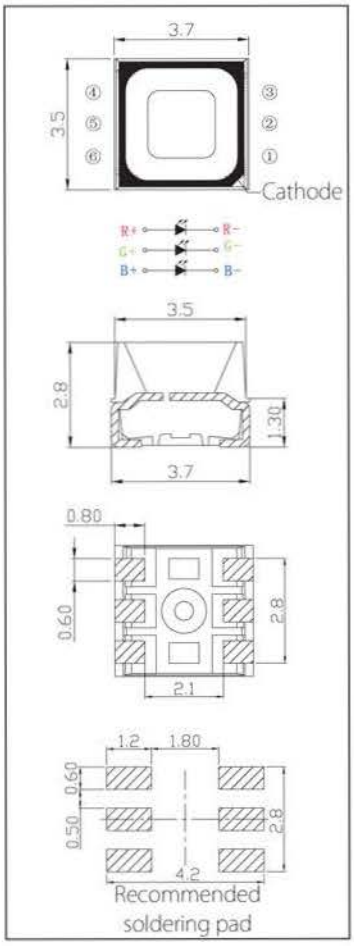

Tolerance: ±0.1mm

Features

- Dust proof,waterproof and UV proof;
- Black frame,soft light,high contrast ratio;
- Compact package and apply to high density outdoor display of P5-P10;
- Apply to outdoor / semi-outdoor displays and other decorative illuminations.

Absolute Maximum Ratings :

Parameter	Symbol	Rating
Forward Current	I_F	25mA
Pulse Forwards Current	I_{FP}	100mA
Reverse Voltage	V_R	5V
Working Temperature	T_{OPR}	-30~+85℃
Storage Temperature	T_{STG}	-40~+100℃

• Pulse Width≤0.1ms, Duty cycle≤1/10

Parameter/Ta=25℃:

Level	Part Number	Color	I_F(mA) TEST	λ_D(nm)/XY Typ.	Iv (mcd) Typ.	V_F (V) Typ.	View angle (deg.)
High Red Brightness	VO-FM-B3535RGBW-WQ		20	620	400	2.0	110
			20	520	850	3.0	110
			20	470	170	3.0	110
High Brightness	VO-FM-B3535RGBW-WT		20	620	500	2.0	110
			20	520	950	3.0	110
			20	470	200	3.0	110

TOP RGB LED

Outdoor & High Frame With Waterproofness H5050 Series

H5050 Series

Outline Dimensions/Unit: mm

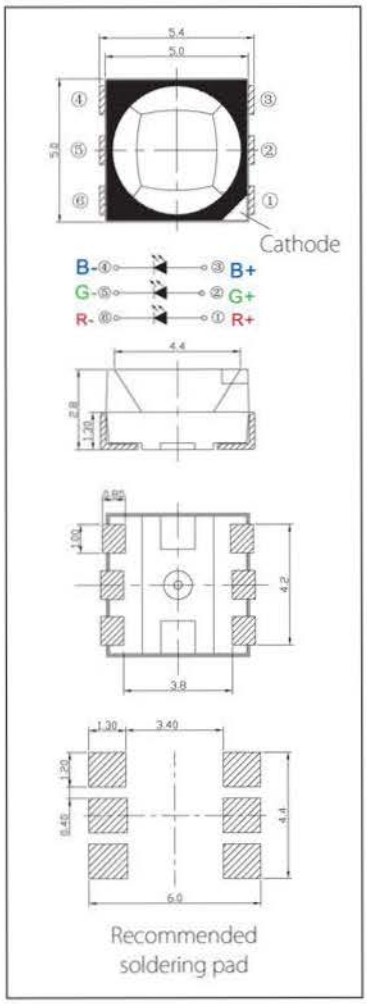

Tolerance : ±0.1mm

Features

- ·White frame with black surface, high brightness and high contrast ratio;
- ·Diffusing encapsulation with epoxy resin , soft light and good conformity;
- ·High frame with short pins, suitable for glue-injection, high reliability, long lifespan and easy to control;
- ·Apply to outdoor, semi-outdoor displays, curtain displays and other decorative illuminates.

Absolute Maximum Ratings :

Parameter	Symbol	Rating
Forward Current	I_F	25mA
Pulse Forwards Current	I_{FP}	100mA
Reverse Voltage	V_R	5V
Working Temperature	T_{OPR}	-30~+85℃
Storage Temperature	T_{STG}	-40~+100℃

• Pulse Width≤0.1ms, Duty cycle≤1/10

Parameter/Ta=25℃:

Part Number	Color	I_F(mA) TEST	λ_D(nm)/XY Typ.	I_V (mcd) Typ.	V_F (V) Typ.	View angle (deg.)
VO-FM-H5050RGBW-WQ		20	620	900	2.0	110
		20	520	2400	3.0	110
		20	470	650	3.0	110

TOP RGB LED

Ultra-Thin 5050 Series

5050 Series

Outline Dimensions/Unit: mm

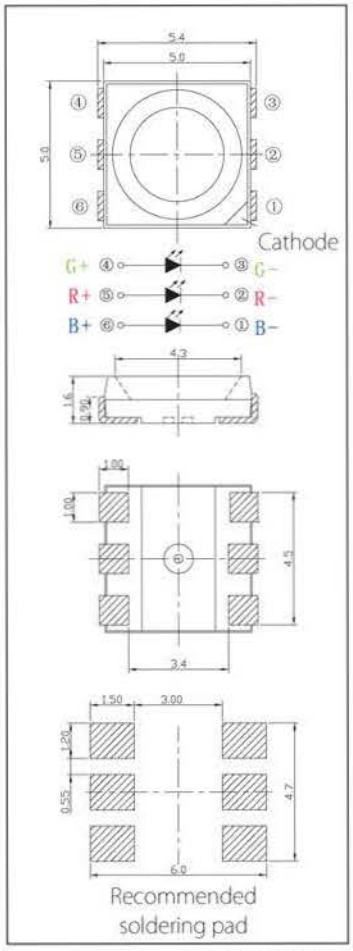

Tolerance: ±0.1mm

Features

- White frame and high brightness;
- Transparent encapsulation with epoxy resin , wide viewing angle and high reliability;
- Small size, light weight, high reliability, long lifespan and easy to control;
- Apply to strips, tubes, stage lights and other decorative illuminates.

Absolute Maximum Ratings :

Parameter	Symbol	Rating
Forward Current	I_F	25mA
Pulse Forwards Current	I_{FP}	100mA
Reverse Voltage	V_R	5V
Working Temperature	T_{OPR}	-30~+85℃
Storage Temperature	T_{STG}	-40~+100℃

• Pulse Width≤0.1ms, Duty cycle≤1/10

Parameter/Ta=25℃:

Level	Part Number	Color	I_F(mA) TEST	λ_D(nm)/XY Typ.	I_V (mcd) Typ.	V_F (V) Typ.	View angle (deg.)
Standard Brightness	VO-FM-5050RGBK-HG		20	620	350	2.0	110
			20	520	1500	3.0	110
			20	470	450	3.0	110
High Red Brightness	VO-FM-5050RGBK-SG		20	620	650	2.0	110
			20	520	1500	3.0	110
			20	470	485	3.0	110

VAOPTO Lighting Components List

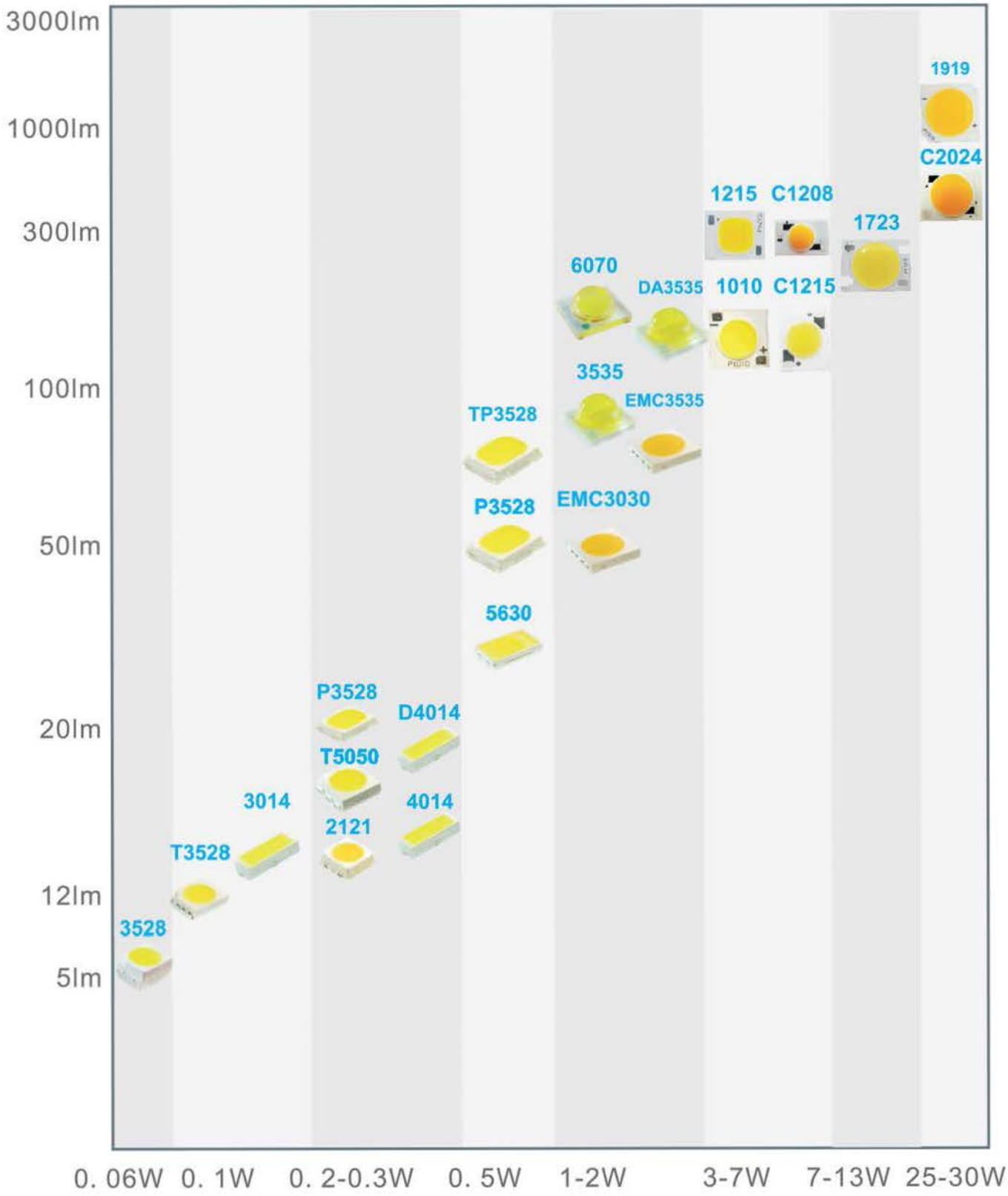

● Best Suitable ◎ Suitable

TYPE		LIGHT TUBE	BULB	DOWNLIGHT	SPOT LIGHT	LIGHT PANEL	CABINET LIGHT	HIGH BAY LIGHT	CANDLE LIGHT	STRIPS	LIGHT MODULE	TUNNEL LIGHT	STREET LIGHT	BACK LIGHT
P3528		●	●	●		◎	◎							
TP3528			●	●										
3014		●	◎	◎		●								
T3528		●				●								
5630			●	●										●
D4014		●												
4014														●
3528		◎								●	●			
5050										●	●			
2121			◎	◎		◎	●							
3535					●			●	●			●	●	
6070					●			●				●	●	
EMC Series							●							●
COB Series			●	●	●									

*The above information is for reference only.

TOP LED - Small size & High power white light

P3528 Series

P3528 Series

Thermal Dissipating Structure :

The chip is directly placed on the thermal dissipating pad, and the heat generated from the chip is directly conducted to the PCB.

Outline Dimensions/Unit: mm

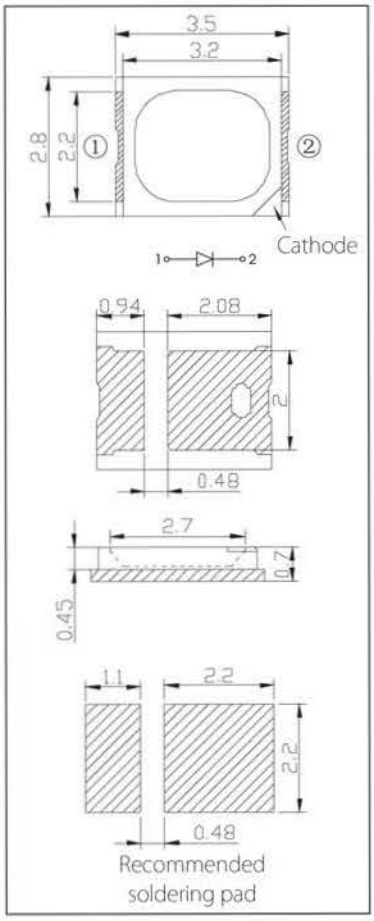

Tolerance: ±0.1mm

Features:

- Thin package with heat sink, high power, equivalent to 5630 power LED;
- Apply to LED bulb, LED downlight and other lighting products;
- Rated power: 0.5W / 0.2W;
- New 0. 2W Plant-growth light for different plants.

Absolute maximum parameters:

Parameter	Symbol	Rating 0.2W	Rating 0.5W
Forward Current	I_F	75mA	200mA
Pulse Forwards Current*2	I_{FP}	200mA	500mA
Reverse Voltage	V_R	5V	
Working Temperature	T_{OPR}	-30~+85℃	
Storage Temperature	T_{STG}	-40~+100℃	

Parameter/Ta=25℃:

Power	Color	Part Number	λp (nm)	I_F(mA) TEST	Po (mW) Typ.	V_F (V) Typ.
0.2W Plant-growth light series	Infrared	VO-FM-P3528IRS-730U	730	60	70	2.0
	DarkRed	VO-FM-P3528HRS-660U	660	60	70	2.0
	Blue	VO-FM-P3528BS-450Q	450	60	90	3.2
	Weak Red	VO-FM-P3528WPS-450Q	(0. 351, 0. 274)	60	90	3.2
	Weak Blue	VO-FM-P3528WBS-450Q	(0. 25, 0. 213)	60	90	3.2
	Weak White	VO-FM-P3528WNS-450Q	(0. 306, 0. 29)	60	90	3.2

Power	Color	Part Number	Color Temperature Tc (K)	CRI Ra Min.	I_F(mA) TEST	Φv (lm) Typ.	V_F (V) Typ.	I_R(μA) Max*1
0.5W	Natural White	VO-FM-P3528WNS-460W	5600-6500	70	150	54	3.2	10
	Neutral White	VO-FM-P3528WDS-460W-R80	3700-4200	80	150	48	3.2	10
	Warm White	VO-FM-P3528WLS-460W-R80	2800-3200	80	150	44	3.2	10
0.2W	Natural White	VO-FM-P3528WNS-460Q	5600-6500	70	60	20	3.2	10
	Neutral White	VO-FM-P3528WDS-460Q-R80	3700-4200	80	60	18	3.2	10
	Warm White	VO-FM-P3528WLS-460Q-R80	2800-3200	80	60	16	3.2	10

• 1 Test condition of reverse current leakage:VR=5V • 2 Pulse width≤0.1ms, Duty cycle≤1/10

TOP LED - High Voltage & High brightness white

TP3528 Series

TP 3528Series

Thermal Dissipating Structure :

The chip is directly placed on the thermal dissipating pad, and the heat generated from the chip is directly conducted to the PCB.

Outline Dimensions/ Unit: mm

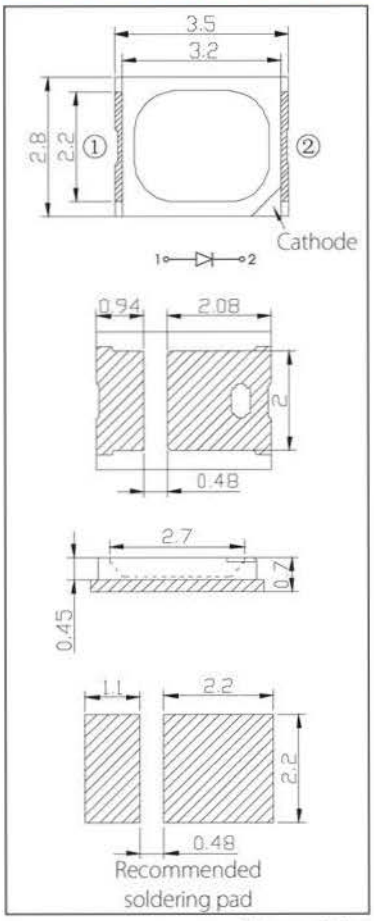

Tolerance: ±0.1mm

Features:

- High Voltage,9V/pcs, and cost effective;
- Thin package with heat sink, good heat dissipation;
- Applications include LED bulb, and downlight;
- Rated power: 0.3W.

Absolute Maximum Ratings:

Parameter	Symbol	Rating
Forward Current	I_F	35mA
Pulse Forwards Current*2	I_{FP}	100mA
Reverse Voltage	V_R	15V
Working Temperature	T_{OPR}	-30~+85℃
Storage Temperature	T_{STG}	-40~+100℃

• Plus Width≤0.1ms, Duty Cycle≤1/10

Parameter/Ta=25℃:

Color	Part Number	Color Temperature Tc (K)	CRI Ra Min.	I_F(mA) TEST	Φv (lm) Typ.	V_F (V) Typ.
Natural White	VO-FM-TP3528WNS-460R	5600-6500	70	30	31	9.6
Neutral White	VO-FM-TP3528WDS-460R-R70	3700-4200	70	30	31	9.6
Warm White	VO-FM-TP3528WLS-460R-R70	2800-3200	70	30	29	9.6

TOP LED - Small size & High brightness & White light 3014 Series

3014 Series

Thermal Dissipating Structure :

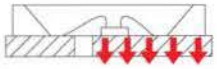

The chip is directly placed on the thermal dissipating pad, and the heat generated from the chip is directly conducted to the PCB.

Outline Dimensions/ Unit: mm

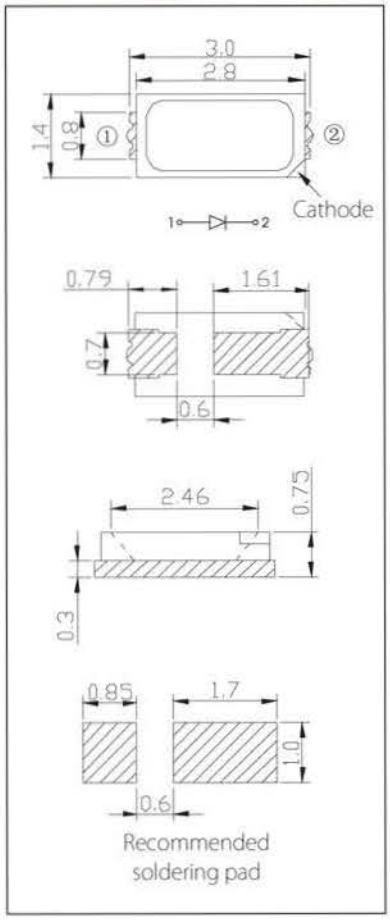

Features:

- Small-size and thin-packing, apply to high-density configuration design;
- CRI R70 or R80 available, typical color temperature 6000K/4000K/3000K;
- Rated power: 0.1W;

Absolute maximum parameters:

Parameter	Symbol	Rating
Forward Current	I_F	35mA
Pulse Forwards Current*2	I_{FP}	100mA
Reverse Voltage	V_R	5V
Working Temperature	T_{OPR}	-30~+85℃
Storage Temperature	T_{STG}	-40~+100℃

Parameter/Ta=25℃:

Color	Part Number	Color Temperature Tc (K)	CRI Ra Min.	I_F(mA) TEST	Φv (lm) Typ.	V_F (V) Typ.	I_R(μA) Max*1
Natural White	VO-FM-3014WNS-460T	5600-6500	70	30	12	3.4	10
Neutral White	VO-FM-3014WDS-460T-R70	3700-4200	70	30	11.5	3.4	10
	VO-FM-3014WDS-460T-R80	3700-4200	80	30	10.5	3.4	10
Warm White	VO-FM-3014WLS-460T-R70	2800-3200	70	30	11	3.4	10
	VO-FM-3014WLS-460T-R80	2800-3200	80	30	10	3.4	10

• 1 Test condition of reverse current leakage:VR=5V • 2 Pulse width≤0.1ms, Duty cycle≤1/10

TOP LED - High brightness & Low cost white light T3528 Series

T3528 Series

Features:

- Thin package, low cost, high illumination efficiency and 120° view angle;
- Various luminosity grades, CRI or color temperatures available;
- Rated power: 0.06W / 0.1W;

Outline Dimensions/ Unit: mm

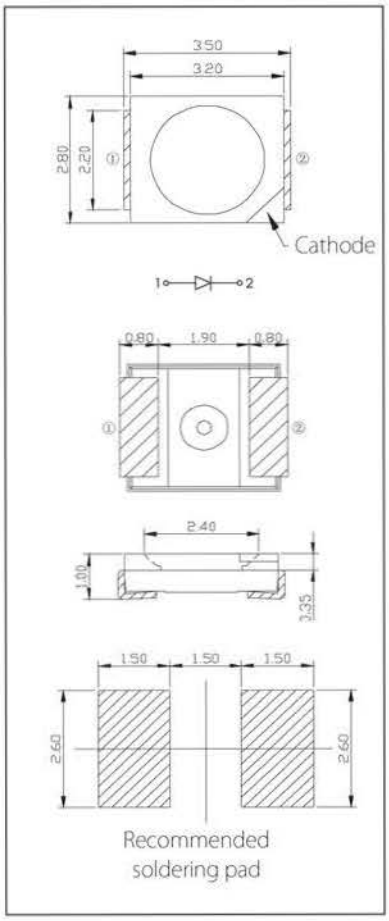

Tolerance unless specified:±0.2mm

Absolute maximum parameters:

Parameter	Symbol	Rating
Forward Current	I_F	35mA
Pulse Forwards Current*2	I_{FP}	100mA
Reverse Voltage	V_R	5V
Working Temperature	T_{OPR}	-30~+85℃
Storage Temperature	T_{STG}	-40~+100℃

Parameter/Ta=25℃:

Rating	Color	Part Number	Color Temperature Tc (K)	CRI Ra Min.	I_F(mA) TEST	Φ_V (lm) Typ.	V_F (V) Typ.	I_R(μA) Max*1
High Brightness	Natural White	VO-FM-T3528WNS-460T	5600-6500	70	20	8.0	3.2	10
	Neutral White	VO-FM-T3528WDS-460T-R70	3700-4200	70	20	7.8	3.2	10
		VO-FM-T3528WDS-460T-R80	3700-4200	80	20	7.0	3.2	10
	Warm White	VO-FM-T3528WLS-460T-R70	2800-3200	70	20	7.5	3.2	10
		VO-FM-T3528WLS-460T-R80	2800-3200	80	20	6.6	3.2	10
Standard Brightness	Natural White	VO-FM-T3528WNS-460R	5600-6500	70	20	7.0	3.2	10
	Neutral White	VO-FM-T3528WDS-460R-R70	3700-4200	70	20	6.5	3.2	10
	Warm White	VO-FM-T3528WLS-460R-R70	2800-3200	70	20	6.0	3.2	10

• 1 Test condition of reverse current leakage:VR=5V • 2 Pulse width≤0.1ms, Duty cycle≤1/10

TOP LED - High power & High brightness white light 5630 Series

5630 Series

Thermal Dissipating Structure :

The chip is directly placed on the thermal dissipating pad, and the heat generated from the chip is directly conducted to the PCB.

Outline Dimensions/ Unit: mm

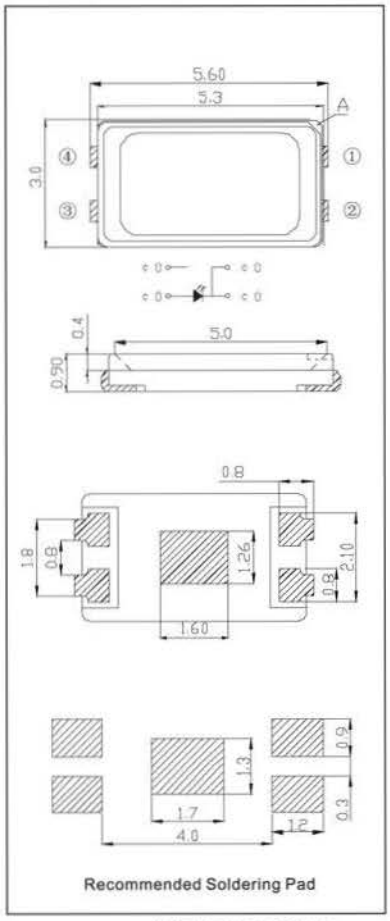

Recommended Soldering Pad

Note: A marks the Cathode
Tolerance unless specified:±0.2mm

Features:

- High power, high brightness, replaces some of the conventional high-power;
- LED with lower cost and smaller size;
- CRI R70 or R80 available, typical color temperature 6000K/4000K/3000K;
- Rated power: 0.5W;

Absolute maximum parameters:

Parameter	Symbol	Rating
Forward Current	I_F	200mA
Pulse Forwards Current*2	I_{FP}	500mA
Reverse Voltage	V_R	5V
Working Temperature	T_{OPR}	-30~+85℃
Storage Temperature	T_{STG}	-40~+100℃

Parameter/Ta=25℃:

Color	Part Number	Color Temperature Tc (K)	CRI Ra Min.	I_F(mA) TEST	Φv (lm) Typ.	V_F (V) Typ.	I_R(μA) Max*1
Natural White	FM-5630WNS-460W	5600-6500	70	150	52	3.2	10
Neutral White	FM-5630WDS-460W-R70	3700-4200	70	150	50	3.2	10
Warm White	FM-5630WLS-460W-R70	2800-3200	70	150	48	3.2	10

• 1 Test condition of reverse current leakage:VR=5V • 2 Pulse width≤0.1ms, Duty cycle≤1/10

TOP LED - High brightness & White backlight

4014 Series

4014 Series

Thermal Dissipating Structure :

The chip is directly placed on the thermal dissipating pad, and the heat generated from the chip is directly conducted to the PCB.

Outline Dimensions/ Unit: mm

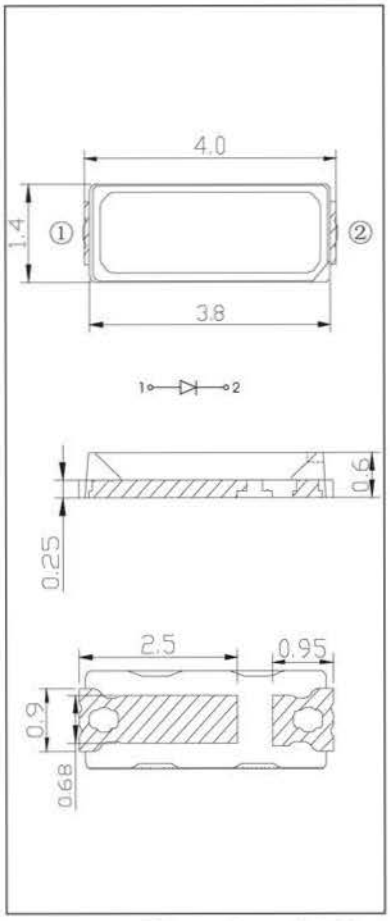

Tolerance unless specified:±0.2mm

Features:

- Long and thin package with heat sink and fast thermal conductive function;
- High luminous flux, high reliability and long lifespan;
- Especially suitable for the backlight products;
- Rated power: 0.2W;

Absolute maximum parameters:

Parameter	Symbol	Rating
Forward Current	I_F	75mA
Pulse Forwards Current*2	I_{FP}	200mA
Reverse Voltage	V_R	5V
Working Temperature	T_{OPR}	-30~+85℃
Storage Temperature	T_{STG}	-40~+100℃

Parameter/Ta=25℃:

Color	Part Number	Color Temperature Tc (K)	CRI Ra Min.	I_F(mA) TEST	Φ_V (lm) Typ.	V_F (V) Typ.	I_R(μA) Max*1
Cool White	VO-FM-4014WS-460Q	>7000	70	60	18	3.2	10

• 1 Test condition of reverse current leakage:VR=5V • 2 Pulse width≤0.1ms, Duty cycle≤1/10

TOP LED - High voltage & White LED

D4014 Series

D4014 Series

Thermal Dissipating Structure :

The chip is directly placed on the thermal dissipating pad, and the heat generated from the chip is directly conducted to the PCB.

Outline Dimensions/ Unit: mm

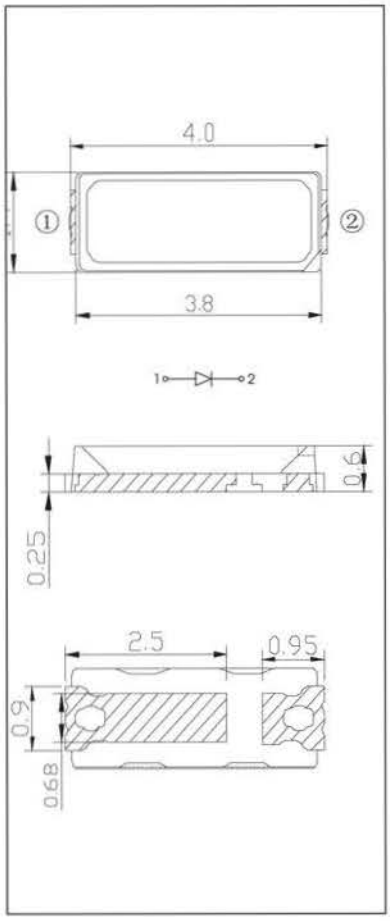

Tolerance unless specified:±0.2mm

Features:

- High Voltage 6V/pcs;
- Thin package with heat sink, good heat dissipation;
- Application for tube light, cost-effective;
- Rated power: 0.2W.

Absolute maximum parameters:

Parameter	Symbol	Rating
Forward Current	I_F	35mA
Pulse Forwards Current*2	I_{FP}	100mA
Reverse Voltage	V_R	10V
Working Temperature	T_{OPR}	-30~+85℃
Storage Temperature	T_{STG}	-40~+100℃

Parameter/Ta=25℃:

Color	Part Number	Color Temperature Tc (K)	CRI Ra Min.	I_F(mA) TEST	Φv (lm) Typ.	V_F (V) Typ.
Natural White	VO-FM-D4014WNS-460R	5600-6500	70	30	21	6.4
Neutral White	VO-FM-D4014WDS-460R-R70	3700-4200	70	30	21	6.4
Warm White	VO-FM-D4014WLS-460R-R70	2800-3200	70	30	19	6.4

• 1 Test condition of reverse current leakage:VR=5V • 2 Pulse width≤0.1ms, Duty cycle≤1/10

TOP LED - High brightness & Low cost white light 3528 Series

3528 Series

Outline Dimensions/ Unit: mm

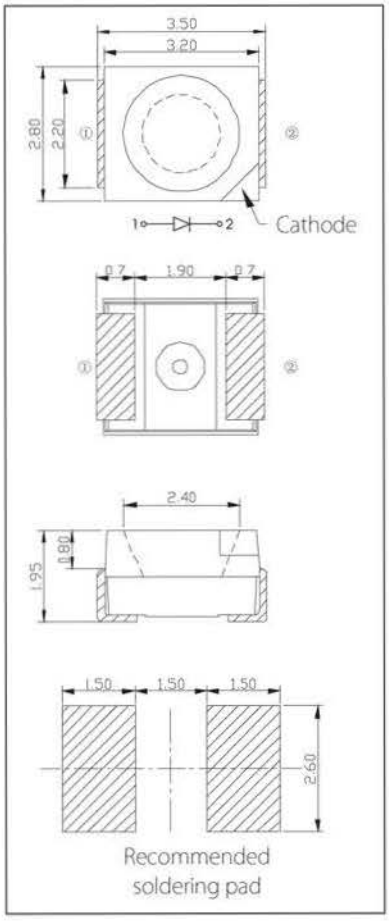

Tolerance unless specified:±0.2mm

Features:

- General size, widely used in various kinds of lighting products;
- Various luminosity levels, CRI or color temperatures available;
- Rated power: 0.06W;

Absolute maximum parameters:

Parameter	Symbol	Rating
Forward Current	I_F	25mA
Pulse Forwards Current*2	I_{FP}	100mA
Reverse Voltage	V_R	5V
Working Temperature	T_{OPR}	-30~+85℃
Storage Temperature	T_{STG}	-40~+100℃

Parameter/Ta=25℃:

Color	Part Number	Color Temperature Tc (K)	CRI Ra Min.	I_F(mA) TEST	Φv (lm) Typ.	V_F (V) Typ.
Natural White	VO-FM-3528WS-460L	7000	/	20	6.0	3.2
Warm White	VO-FM-3528WLS-460L	3000	/	20	5.5	3.2

• 1 Test condition of reverse current leakage:VR=5V • 2 Pulse width≤0.1ms, Duty cycle≤1/10

TOP LED - High brightness & High reliability white light 3-chip T5050 Series

T5050 Series

Features:

- General size, good color-conformity, widely used in various kinds of lighting products;
- Rated power: 0.2W;

Outline Dimensions/ Unit: mm

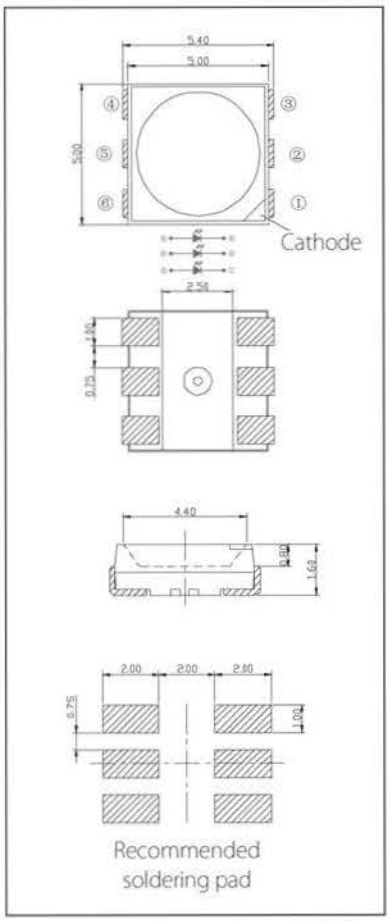

Tolerance unless specified:±0.2mm

Absolute maximum parameters:

Parameter	Symbol	Rating
Forward Current	I_F	3*25mA
Pulse Forwards Current*2	I_{FP}	3*100mA
Reverse Voltage	V_R	5V
Working Temperature	T_{OPR}	-30~+85℃
Storage Temperature	T_{STG}	-40~+100℃

Parameter/Ta=25℃:

Rating	Color	Part Number	Color Temperature Tc (K)	CRI Ra Min.	I_F(mA) TEST	Φ_V (lm) Typ.	V_F (V) Typ.	I_R(μA) Max*1
Standard Brightness	Natural White	VO-FM-T5050WNS-460R	5600-6500	70	60	20	3.2	10
	Neutral White	VO-FM-T5050WDS-460R-R70	3700-4200	70	60	18	3.2	10
	Warm White	VO-FM-T5050WLS-460R-R70	2800-3200	70	60	17	3.2	10
Low Brightness	Natural White	VO-FM-T5050WS-460L	7000	-	60	18	3.2	10
	Neutral White	VO-FM-T5050WLS-460L	3000	-	60	17	3.2	10

• 1 Test condition of reverse current leakage:VR=5V • 2 Pulse width≤0.1ms, Duty cycle≤1/10

TOP LED - Small size & Power white light

2121 Series

2121 Series

Thermal Dissipating Structure :

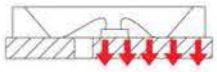

The chip is directly placed on the thermal dissipating pad, and the heat generated from the chip is directly conducted to the PCB.

Outline Dimensions/ Unit: mm

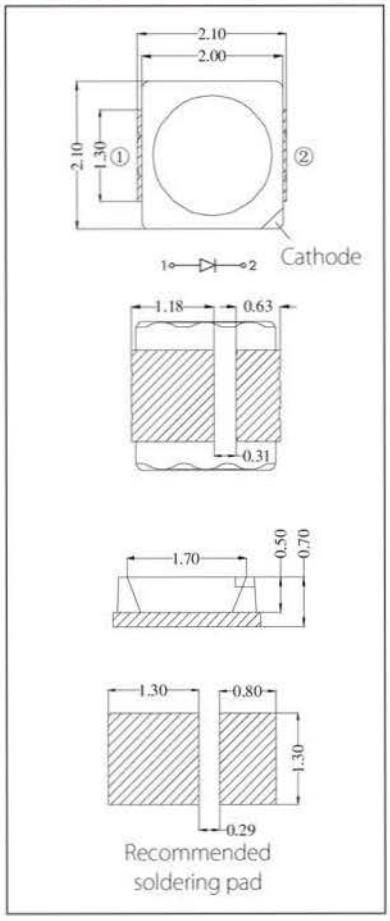

Tolerance unless specified:±0.2mm

Features:

- Small size, 60mA forward current available;
- Application include high-density configuration design;
- With heat sink, fast heat dissipation function and high reliability;
- Rated power: 0.2W;

Absolute maximum parameters:

Parameter	Symbol	Rating
Forward Current	I_F	75mA
Pulse Forwards Current*2	I_{FP}	200mA
Reverse Voltage	V_R	5V
Working Temperature	T_{OPR}	-30~+85℃
Storage Temperature	T_{STG}	-40~+100℃

Parameter/Ta=25℃:

Color	Part Number	Color Temperature Tc (K)	CRI Ra Min.	I_F(mA) TEST	Φv (lm) Typ.	V_F (V) Typ.	I_R(μA) Max*1
Natural White	VO-FM-2121WNS-460Q	5600-6500	70	60	21	3.2	10
Neutral White	VO-FM-2121WDS-460Q-R80	3700-4200	80	60	18	3.2	10
Warm White	VO-FM-2121WLS-460Q-R80	2800-3200	80	60	16	3.2	10

• 1 Test condition of reverse current leakage:VR=5V • 2 Pulse width≤0.1ms, Duty cycle≤1/10

High power LED - EMC Package power LED
3535 Series

3535 Series

Features:

- Good heat resistance and yellowing resistance;
- Good airtight performance;
- High brightness, high power;
- Rated power: 1~2W;

Outline Dimensions/ Unit: mm

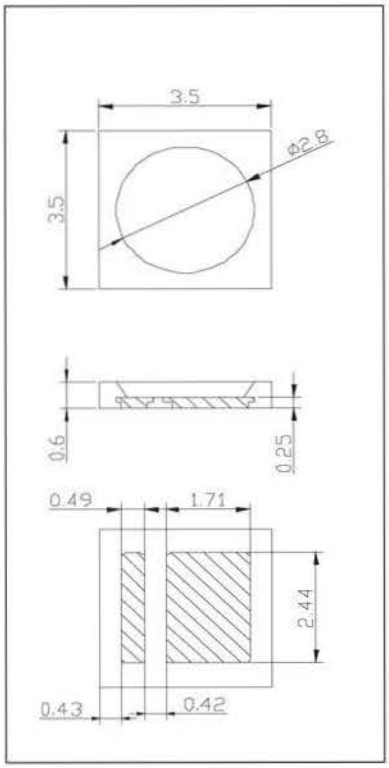

Tolerance unless specified:±0.2mm

Absolute maximum parameters:

Parameter	Symbol	Rating
Forward Current	I_F	400mA
Pulse Forwards Current*2	I_{FP}	1000mA
Reverse Voltage	V_R	5V
Working Temperature	T_{OPR}	-30~+85℃
Storage Temperature	T_{STG}	-40~+100℃

Parameter/Ta=25℃:

Part Number	Color	Color Temperature Tc (K)	I_F(mA)TEST	V_F (V) Typ.	ϕv (lm) Typ.	CRI Ra Min.
			Typ.	Typ.		
VO-EMC 3535	Natural White	5600-6500	350	3.2	120	70
	Neutral White	3700-4200	350	3.2	115	70
	Warm White	2800-3200	350	3.2	110	80

• 1 Test condition of reverse current leakage:VR=5V • 2 Pulse width≤0.1ms, Duty cycle≤1/10

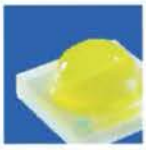

High power LED - Ceramic base reverse bonding LED 3535 Series

3535 Series

Features:

- New eutectic die bonding,without golden wire package,high reliability;
- Ceramic PCB;
- High brightness, high luminous efficiency;
- Rated power: 1~3W

Outline Dimensions/ Unit: mm

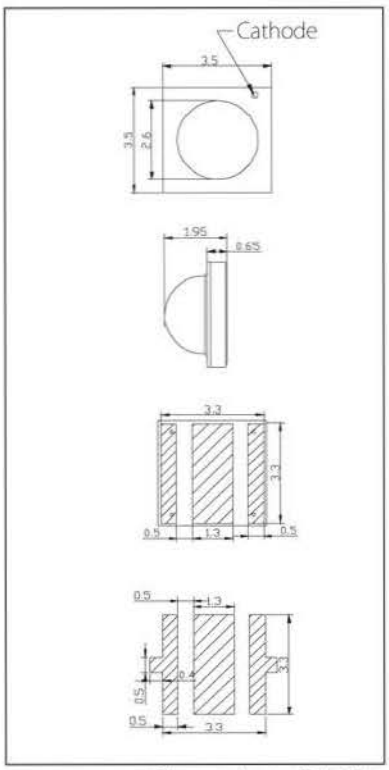

Tolerance unless specified:±0.2mm

Absolute maximum parameters:

Parameter	Symbol	Rating
Forward Current	I_F	1000mA
Pulse Forwards Current*2	I_{FP}	1500mA
Reverse Voltage	V_R	5V
Working Temperature	T_{OPR}	-30~+85℃
Storage Temperature	T_{STG}	-40~+100℃

Parameter/Ta=25℃:

Part Number	Color	Color Temperature Tc (K)	I_F(mA) TEST	V_F (V) Typ.		Φv (lm) Typ.	CRI Ra Min.
			Typ.	Typ.	Max		
VO-Ceramic PCB 3535	Natural White	5600-6500	350	3.0	3.4	120-130	70
	Neutral White	3700-4200	350	3.0	3.4	110-120	70
	Warm White	2800-3200	350	3.0	3.4	90-100	80

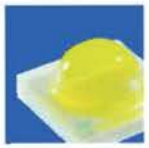

High power LED Ceramic base

3535 Series

3535 Series

Features:

- HTCC ceramic base with high reliability;
- Thermoelectric separated structure,easy reflow soldering process;
- Excellent optics design,effectively reduced systematic luminosity loss;
- Rated power: 1~2W;

Outline Dimensions/ Unit: mm

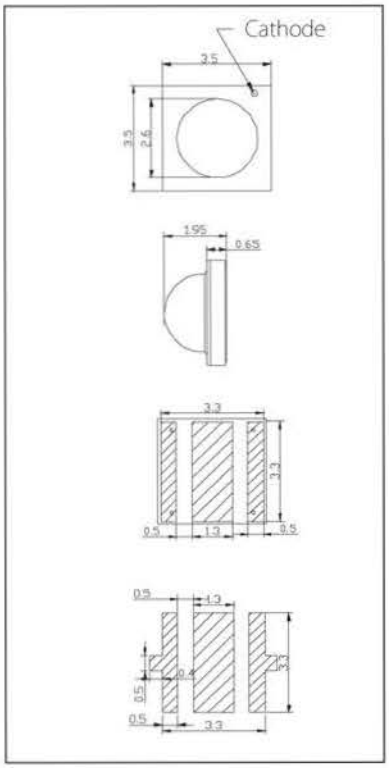

Tolerance unless specified:±0.2mm

Absolute maximum parameters:

Parameter	Symbol	Rating
Forward Current	I_F	400mA
Pulse Forwards Current*2	I_{FP}	1500mA
Reverse Voltage	V_R	5V
Working Temperature	T_{OPR}	-20~+85℃
Storage Temperature	T_{STG}	-30~+100℃

Parameter/Ta=25℃:

Color	Part Number	Color Temperature Tc (K)	CRI Ra Min.	I_F(mA) TEST	Φ_V (lm) Typ.	V_F (V) Typ.
Natural White	VO-FP-3535CW-BCW-LBM	5600-6500	70	350	100	3.2
Neutral White	VO-FP-3535NW-BCW-LBM	3700-4200	70	350	90	3.2
Warm White	VO-FP-3535WW-BCW-R70-LBM	2800-3200	70	350	85	3.2

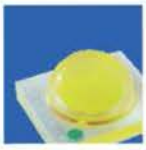

High power LED - PCB Base

6070 Series

6070 Series

Outline Dimensions/ Unit: mm

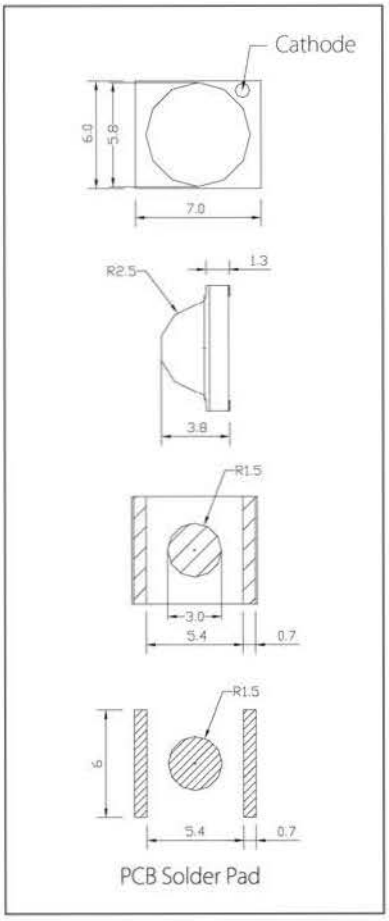

Tolerance unless specified:±0.2mm

Features:

- Patented PCB base structure, fast thermal dissipation function with low thermal resistance;
- Available for outdoor white light illumination;
- Rated power: 1~2W;

Absolute maximum parameters:

Parameter	Symbol	Rating
Forward Current	I_F	FP-6070XW-AFZ-LBM 400mA FP-6070XW-AFZ-ED1M 500mA
Pulse Forwards Current*2	I_{FP}	700mA
Reverse Voltage	V_R	5V
Working Temperature	T_{OPR}	-30~+85℃
Storage Temperature	T_{STG}	-40~+100℃

Parameter/Ta=25℃:

Rating	Color	Part Number	Color Temperature Tc (K)	CRI Ra Min.	I_F(mA) TEST	Φv (lm) Typ.	V_F (V) Typ.
High Brightness	Natural White	VO-FP-6070CW-AFZ-ED1M	5600-6500	70	350	135	3.2
	Neutral White	VO-FP-6070NW-AFZ-ED1M	3700-4200	70	350	120	3.2
	Warm White	VO-FP-6070WW-AFZ-R80-ED1M	2800-3200	80	350	110	3.2
Standard Brightness	Natural White	VO-FP-6070CW-AFZ-LBM	5600-6500	70	350	110	3.2
	Neutral White	VO-FP-6070NW-AFZ-LBM	3700-4200	70	350	100	3.2
	Warm White	VO-FP-6070WW-AFZ-R70-LBM	2800-3200	70	350	90	3.2

• 1 Test condition of reverse current leakage:VR=5V • 2 Pulse width≤0.1ms, Duty cycle≤1/10

COB LED-Metal PCB
1215 Series

1215 Series

Light Distribution Curve:

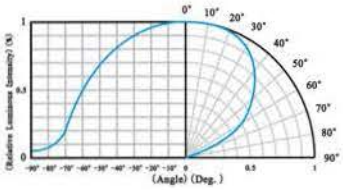

Features:

- Patented PCB structure, good heat conductive function and high reliability;
- Simplifying indoor LED illumination design and manufacturing process;
- Single uniform optics system, good optics conformity;
- Rated power: 3~7W;

Outline Dimensions/ Unit: mm

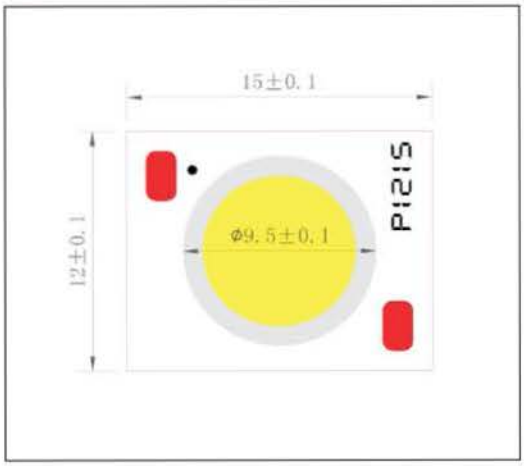

Absolute maximum parameters:

Parameter	Symbol	Rating
Working Temperature	T_{OPR}	-30~+100℃
Storage Temperature	T_{STG}	-40~+100℃

Parameter/Ta=25℃:

Part Number	Rating	Color	Color Temperature Tc (K)	CRI Ra Min.	I_F(mA) TEST	Φ_V (lm) Typ.	V_F (V) Typ.
VO- Metal PCB 1215	3W	Natural White	6000	70	350	365	9.3
		Neutral White	4000	75	350	342	9.3
		Warm White	3000	80	350	320	9.3
	5W	Natural White	6000	70	500	455	9.3
		Neutral White	4000	75	500	474	9.3
		Warm White	3000	80	500	635	9.3
	7W	Natural White	6000	70	350	740	18.9
		Neutral White	4000	75	350	659	18.9
		Warm White	3000	80	350	635	18.9

COB LED-Metal PCB
1723 Series

1723 Series

Light Distribution Curve:

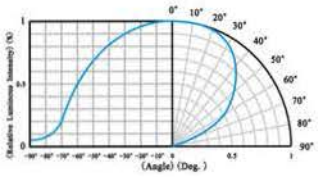

Features:

- Patented PCB structure, fast thermal dissipation function and low thermal resistance;
- Using less LED and other accessories, lower down total system cost;
- Good optics conformity and high reliability;
- Rated power: 7-20W;

Outline Dimensions/ Unit: mm

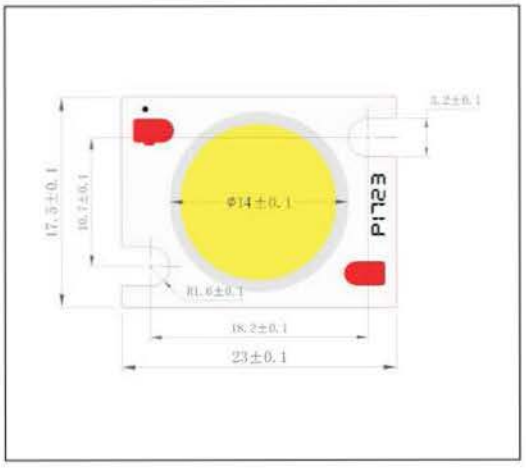

Absolute maximum parameters:

Parameter	Symbol	Rating
Working Temperature	T_{OPR}	-30~+100℃
Storage Temperature	T_{STG}	-40~+100℃

Parameter/Ta=25℃:

Part Number	Rating	Color	Color Temperature Tc (K)	CRI Ra Min.	I_F(mA) TEST	Φv (lm) Typ.	V_F (V) Typ.
VO- Metal PCB 1723	7W	Natural White	6000	70	350	717	/
		Neutral White	4000	75	350	673	/
		Warm White	3000	80	350	624	/
	10W	Natural White	6000	70	500	1120	/
		Neutral White	4000	75	500	1050	/
		Warm White	3000	80	500	979	/
	13W	Natural White	6000	70	350	1410	36
		Neutral White	4000	75	350	1320	36
		Warm White	3000	80	350	1228	36
	20W	Natural White	6000	70	700	2150	27.5
		Neutral White	4000	75	700	2020	27.5
		Warm White	3000	80	700	1877	27.5

COB LED-Metal PCB
1010 Series

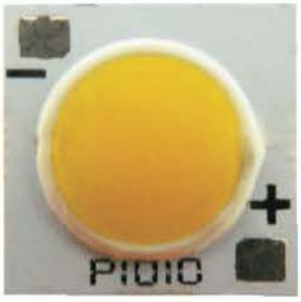

1010 Series

Light Distribution Curve:

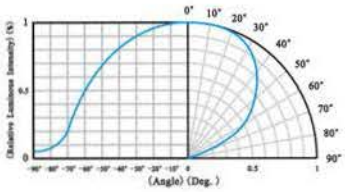

Features:

- Patented PCB structure, good heat conductivity and high reliability;
- Simplifying indoor LED illumination design and manufacturing process;
- Single uniform optics system, good optics conformity;
- Rated power: 3~5W;

Outline Dimensions/ Unit: mm

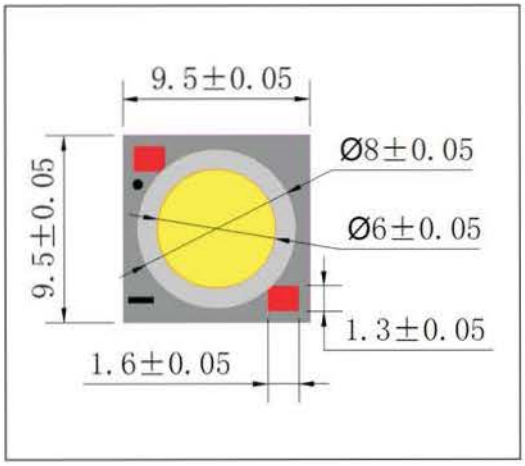

Absolute maximum parameters:

Parameter	Symbol	Rating
Forward Current	I_F	450mA
Reverse Voltage	V_{RMAX}	15V
Working Temperature	T_{OPR}	-30~+100℃
Storage Temperature	T_{STG}	-40~+100℃

Parameter/Ta=25℃:

Part Number	Rating	Color	Color Temperature Tc (K)	CRI Ra Min.	I_F(mA) TEST	Φ_V (lm) Typ.	V_F (V) Typ.
VO- Metal PCB 1010	3W	Natural White	6000	70	350	365	9.3
		Neutral White	4000	75	350	342	9.3
		Warm White	3000	80	350	320	9.3

COB LED-Metal PCB
1919 Series

1919 Series

Light Distribution Curve:

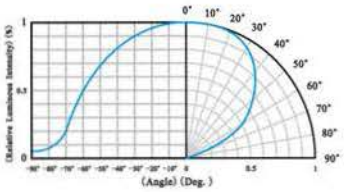

Features:

- Patented PCB structure, fast thermal dissipation function and low thermal resistance;
- Using less LED and other accessories, lower down total system cost;
- Good optics conformity and high reliability;
- Rated power: 20-40W;

Outline Dimensions/ Unit: mm

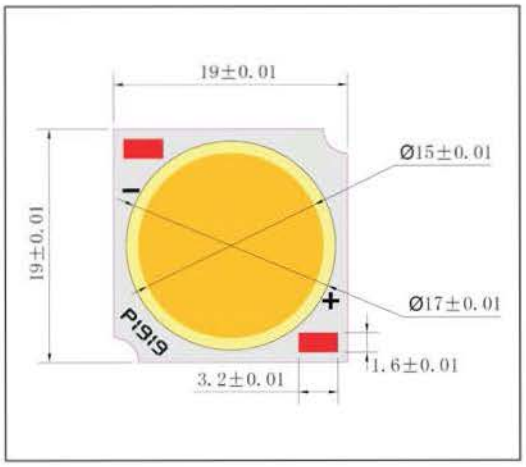

Absolute maximum parameters:

Parameter	Symbol	Rating
		25W
Forward Current	I_F	850mA
Reverse Voltage	V_{RMAX}	60V
Working Temperature	T_{OPR}	-30~+100℃
Storage Temperature	T_{STG}	-40~+100℃

Parameter/Ta=25℃:

Part Number	Rating	Color	Color Temperature Tc (K)	CRI Ra Min.	I_F(mA) TEST	Φv (lm) Typ.	V_F (V) Typ.
VO- Metal PCB 1919	25W	Natural White	6000	70	700	2950	37.8
		Neutral White	4000	70	700	2770	37.8
		Warm White	3000	80	700	2500	37.8

COB LED-Ceramic PCB
1208 Series

1208 Series

Light Distribution Curve:

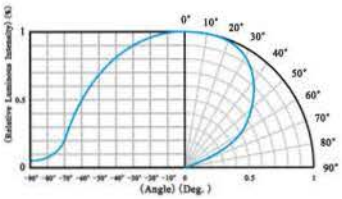

Features:

- Ceramic PCB, high reliability;
- Optimizing the design and manufacturing of LED lighting;
- Rated power: 3W.

Outline Dimensions/ Unit: mm

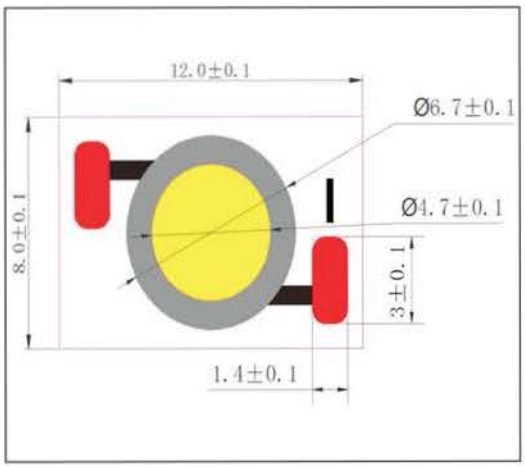

Absolute maximum parameters:

Parameter	Symbol	Rating
Forward Current	I_F	450mA
Reverse Voltage	V_{RMAX}	15V
Working Temperature	T_{OPR}	-30~+100℃
Storage Temperature	T_{STG}	-40~+100℃

Parameter/Ta=25℃:

Part Number	Rating	Color	Color Temperature Tc (K)	CRI Ra Min.	I_F(mA) TEST	Φ_V (lm) Typ.	V_F (V) Typ.
VO- Ceramic PCB 1208	3W	Natural White	6000	70	350	365	9.3
		Neutral White	4000	75	350	342	9.3
		Warm White	3000	80	350	320	9.3

COB LED-Ceramic PCB
1215 Series

1215 Series

Light Distribution Curve:

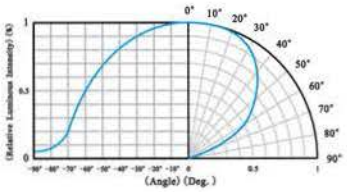

Features:

- Ceramic PCB, high reliability;
- Optimizing the design and manufacturing of LED lighting;
- Rated power: 7W.

Outline Dimensions/ Unit: mm

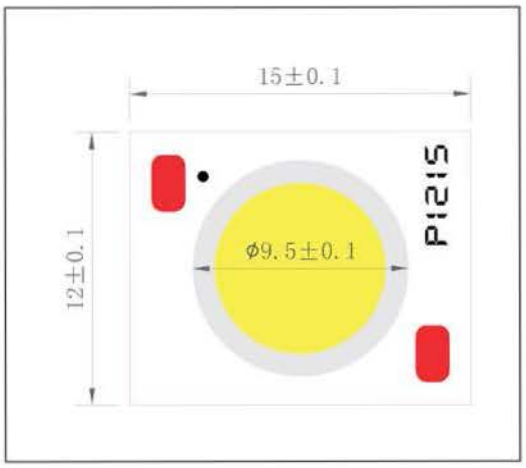

Absolute maximum parameters:

Parameter	Symbol	Rating
Forward Current	I_F	420mA
Reverse Voltage	V_{RMAX}	30V
Working Temperature	T_{OPR}	-30~+100℃
Storage Temperature	T_{STG}	-40~+100℃

Parameter/Ta=25℃:

Part Number	Rating	Color	Color Temperature Tc (K)	CRI Ra Min.	I_F(mA) TEST	Φ_V (lm) Typ.	V_F (V) Typ.
VO- Ceramic PCB 1215	7W	Natural White	6000	70	350	740	18.9
		Neutral White	4000	75	350	695	18.9
		Warm White	3000	80	350	635	18.9

COB LED-Ceramic PCB
2024 Series

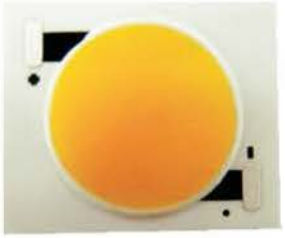

2024 Series

Light Distribution Curve:

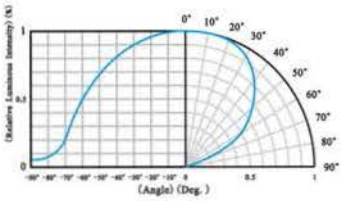

Features:

- Ceramic PCB, high reliability;
- Optimizing the design and manufacturing of LED lighting;
- Rated power: 25W.

Outline Dimensions/ Unit: mm

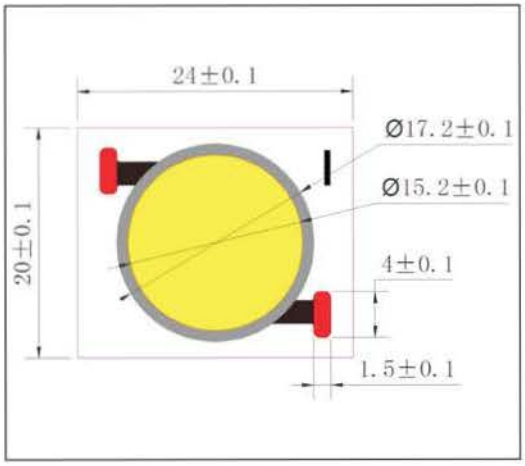

Absolute maximum parameters:

Parameter	Symbol	Rating
Forward Current	I_F	850mA
Reverse Voltage	V_{RMAX}	60V
Working Temperature	T_{OPR}	-30~+100℃
Storage Temperature	T_{STG}	-40~+100℃

Parameter/Ta=25℃:

Part Number	Rating	Color	Color Temperature Tc (K)	CRI Ra Min.	I_F(mA) TEST	Φ_V (lm) Typ.	V_F (V) Typ.
VO- Ceramic PCB 2024	25W	Natural White	6000	70	750	2950	37.8
		Neutral White	4000	75	750	2770	37.8
		Warm White	3000	80	750	2500	37.8

LED Module

Auto light Series

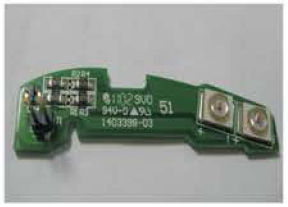

Features

- color uniformity, low power consuption ,high reliability , long life-span;
- Mainly used for indication of instruments, dashboard, decorative lightings, indoor display, etc..

Outline Dimensions/ Unit: mm

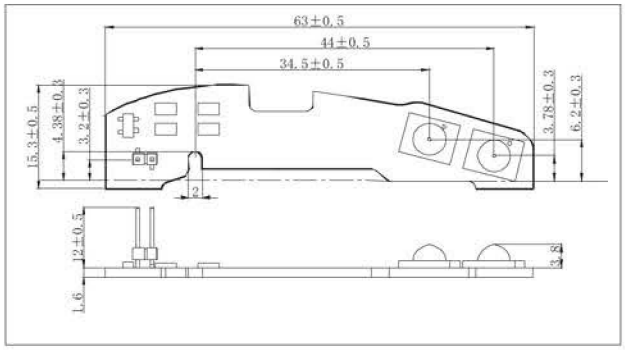

Tolerance: ±0.1mm

Absolute Maximum Ratings:

Parameter	Symbol	Rating
Forward Current	I_F	150mA
Pulse Forwards Current	I_{FP}	350mA
Reverse Voltage	V_R	5V
Working Temperature	T_{OPR}	-30~+50℃
Storage Temperature	T_{STG}	-30~+80℃

• Pulse Width≤0.1ms, Duty Cycle≤1/10

Parameter/Ta=25℃:

Part Number	Color	I_F(mA) TEST	λ_D(nm) Typ.	Flux(lm) Typ.	V_F (V) Typ.
VO-L538-R	Yellow	110	590	23	13.5

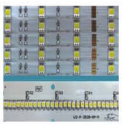

LED Engine

LED Engine Series

LED Engine

Applications: SSL Lighting, Industrial Lighting, Commercial, Residential Lighting.
Features: Energy Saving, Long Life, Cool Light, Green Environment.

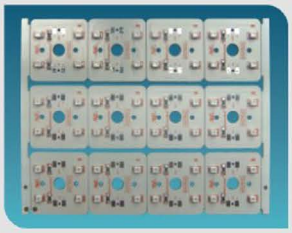

LED Modules

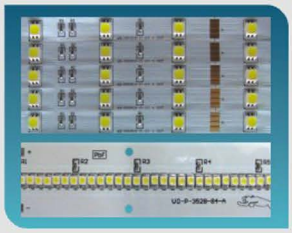

Flex/Hard Strips, Tube Light

LED Reading Lamp

Spot Light/Down Light/R Lamp/Bulb

LED Ceiling Light

LED Panel Light

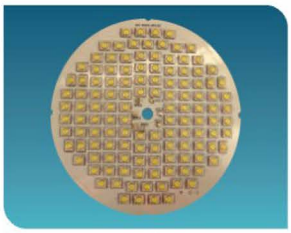

LED Hi-Bay/Low-Bay

LED Street Light/LED Parking Lot Light

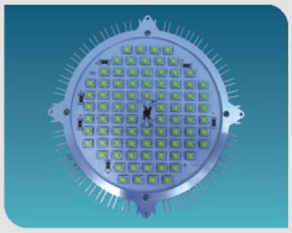

Heat Solution

Optical Lens Solution

UV LED Luminaire

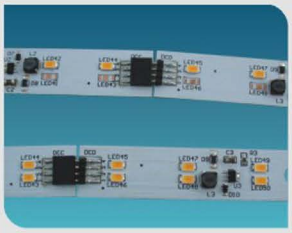

Schematical Design & Connector Design

10000K 6000K 4000K 3000K

Luminous Intensity / Luminous Flux Bins Table

High Power LED Bins are Sorted by Luminous Flux

Code	Luminous Flux（lm）	
	Minimum	Maximum
F1	60	70
F2	70	80
G1	80	90
G2	90	100
H1	100	110
H2	110	120
J1	120	130
J2	130	140

TOP LED Bins are Sorted by Luminous Intensity

Code	Luminous Intensity (cd)	Code	Luminous Intensity (cd)
A0	1.2 ~ 1.5	N0	5.8 ~ 6.4
B0	1.5 ~ 1.8	O0	6.4 ~ 7.7
C0	1.8 ~ 2.1	P0	7.7 ~ 8.5
D0	2.1 ~ 2.4	Q0	8.5 ~9.3
E0	2.4 ~ 2.7	R0	9.3 ~10.2
F0	2.7 ~ 3.0	S0	10.2 ~ 11.2
G0	3.0 ~ 3.3	T0	11.2-12.3
H0	3.3 ~ 3.6	U0	12.3-13.5
I0	3.6 ~ 4.0	V0	13.5-15.0
J0	4.0 ~ 4.4	W0	15.0-16.5
K0	4.4 ~ 4.8	X0	16.8-18.0
L0	4.8 ~ 5.3	Y0	18-20
M0	5.3 ~ 5.8	Z0	20-22

Voltage Bins

Each TOP LED Voltage Bin Range is 0.1V

Each High Power LED Voltage Bin Range is 0.2V

0.2V Bins Table		0.1V Bins Table	
Code	Voltage(V)	Code	Voltage(V)
I0	2.8-3.0	I1	2.8-2.9
		I2	2.9-3.0
J0	3.0-3.2	J1	3.0-3.1
		J2	3.1-3.2
K0	3.2-3.4	K1	3.2-3.3
		K2	3.3-3.4
L0	3.4-3.6	L1	3.4-3.5
		L2	3.5-3.6
M0	3.6-3.8	M1	3.6-3.7
		M2	3.7-3.8
N0	3.8-4.0	N1	3.8-3.9
		N2	3.9-4.0
O0	4.0-4.2	O1	4.0-4.1
		O2	4.1-4.2

ENERGY STAR

VAOPTO LED Has American Energy Star Certificate

Color Binning

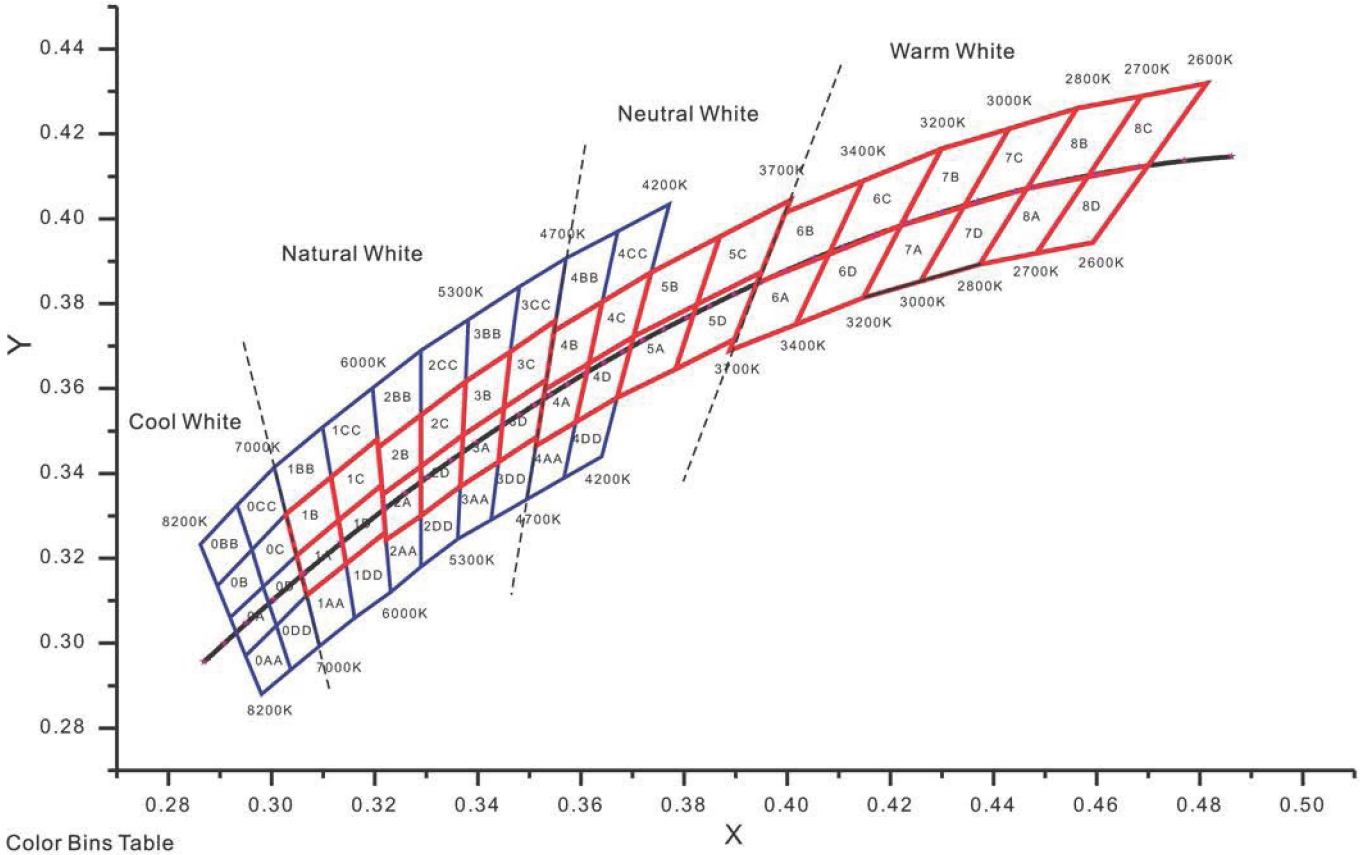

Color Bins Table

COLOR BIN	X	Y	COLOR BIN	X	Y	COLOR BIN	X	Y	COLOR BIN	X	Y
OA	0.295	0.297	OB	0.292	0.306	OC	0.2984	0.3133	OD	0.2984	0.3133
	0.292	0.306		0.2895	0.3135		0.2962	0.322		0.3048	0.3207
	0.2984	0.3133		0.2962	0.322		0.3028	0.3304		0.3068	0.3113
	0.3009	0.3042		0.2984	0.3133		0.3048	0.3207		0.3009	0.3042
OAA	0.298	0.288	OBB	0.2895	0.3135	OCC	0.2962	0.322	ODD	0.3037	0.2937
	0.295	0.297		0.2862	0.3233		0.2933	0.3325		0.3009	0.3042
	0.3009	0.3042		0.2933	0.3325		0.3005	0.3415		0.3068	0.3113
	0.3037	0.2937		0.2962	0.322		0.3028	0.3304		0.3093	0.2993
1A	0.3048	0.3207	1B	0.3028	0.3304	1C	0.3115	0.3391	1D	0.313	0.329
	0.313	0.329		0.3115	0.3391		0.3205	0.3481		0.3213	0.3373
	0.3144	0.3186		0.313	0.329		0.3213	0.3373		0.3221	0.3261
	0.3068	0.3113		0.3048	0.3207		0.313	0.329		0.3144	0.3186
1AA	0.3093	0.2993	1BB	0.3005	0.3415	1CC	0.3099	0.3509	1DD	0.3161	0.3059
	0.3068	0.3113		0.3099	0.3509		0.3196	0.3602		0.3144	0.3186
	0.3144	0.3186		0.3115	0.3391		0.3205	0.3481		0.3221	0.3261
	0.3161	0.3059		0.3028	0.3304		0.3115	0.3391		0.3231	0.312
2A	0.3215	0.335	2B	0.3206	0.3461	2C	0.329	0.3538	2D	0.329	0.3417
	0.329	0.3417		0.329	0.3538		0.3376	0.3616		0.3371	0.349
	0.329	0.33		0.329	0.3417		0.3371	0.349		0.3366	0.3369
	0.3222	0.3243		0.3215	0.335		0.329	0.3417		0.329	0.33

COLOR BIN	X	Y	COLOR BIN	X	Y	COLOR BIN	X	Y	COLOR BIN	X	Y
2AA	0.3231	0.312	2BB	0.3196	0.3602	2CC	0.329	0.369	2DD	0.329	0.318
	0.3222	0.3243		0.329	0.369		0.3381	0.3762		0.329	0.33
	0.329	0.33		0.329	0.3538		0.3376	0.3616		0.3366	0.3369
	0.329	0.318		0.3206	0.3461		0.329	0.3538		0.3361	0.3245
3A	0.3371	0.349	3B	0.3376	0.3616	3C	0.3463	0.3687	3D	0.3451	0.3554
	0.3451	0.3554		0.3463	0.3687		0.3551	0.376		0.3533	0.362
	0.344	0.3427		0.3451	0.3554		0.3533	0.362		0.3515	0.3487
	0.3366	0.3369		0.3371	0.349		0.3451	0.3554		0.344	0.3427
3AA	0.3361	0.3245	3BB	0.3381	0.3762	3CC	0.348	0.384	3DD	0.3426	0.3291
	0.3366	0.3369		0.348	0.384		0.3571	0.3907		0.344	0.3428
	0.344	0.3428		0.3463	0.3687		0.3551	0.376		0.3515	0.3487
	0.3426	0.3291		0.3376	0.3616		0.3463	0.3687		0.3495	0.3339
4A	0.353	0.3597	4B	0.3548	0.3736	4C	0.3641	0.3804	4D	0.3615	0.3659
	0.3615	0.3659		0.3641	0.3804		0.3736	0.3874		0.3702	0.3722
	0.359	0.3521		0.3615	0.3659		0.3702	0.3722		0.367	0.3578
	0.3512	0.3465		0.353	0.3597		0.3615	0.3659		0.359	0.3521
4AA	0.3495	0.3339	4BB	0.3571	0.3907	4CC	0.3671	0.397	4DD	0.3567	0.3389
	0.3512	0.3465		0.3671	0.397		0.3771	0.4034		0.359	0.3521
	0.359	0.3521		0.3641	0.3804		0.3736	0.3874		0.367	0.3578
	0.3567	0.3389		0.3548	0.3736		0.3641	0.3804		0.364	0.344
5A	0.367	0.3578	5B	0.3702	0.3722	5C	0.3825	0.3798	5D	0.3783	0.3646
	0.3702	0.3722		0.3736	0.3874		0.3869	0.3958		0.3825	0.3798
	0.3825	0.3798		0.3869	0.3958		0.4006	0.4044		0.395	0.3875
	0.3783	0.3646		0.3825	0.3798		0.395	0.3875		0.3898	0.3716
6A	0.3889	0.369	6B	0.3941	0.3848	6C	0.408	0.3916	6D	0.4017	0.3751
	0.3941	0.3848		0.3996	0.4015		0.4146	0.4089		0.408	0.3916
	0.408	0.3916		0.4146	0.4089		0.4299	0.4165		0.4221	0.3984
	0.4017	0.3751		0.408	0.3916		0.4221	0.3984		0.4147	0.3814
7A	0.4147	0.3814	7B	0.4221	0.3984	7C	0.4342	0.4028	7D	0.4259	0.3851
	0.4221	0.3984		0.4299	0.4165		0.443	0.4212		0.4342	0.4028
	0.4342	0.4028		0.443	0.4212		0.4562	0.426		0.4465	0.4071
	0.4259	0.3853		0.4342	0.4028		0.4465	0.4071		0.4373	0.3893
8A	0.4373	0.3893	8B	0.4465	0.4071	8C	0.4582	0.4099	8D	0.4483	0.3919
	0.4465	0.4071		0.4562	0.426		0.4687	0.4289		0.4582	0.4099
	0.4582	0.4099		0.4687	0.4289		0.4813	0.4319		0.47	0.4126
	0.4483	0.3919		0.4582	0.4099		0.47	0.4126		0.4593	0.3944

CIE1931 chromaticity diagram

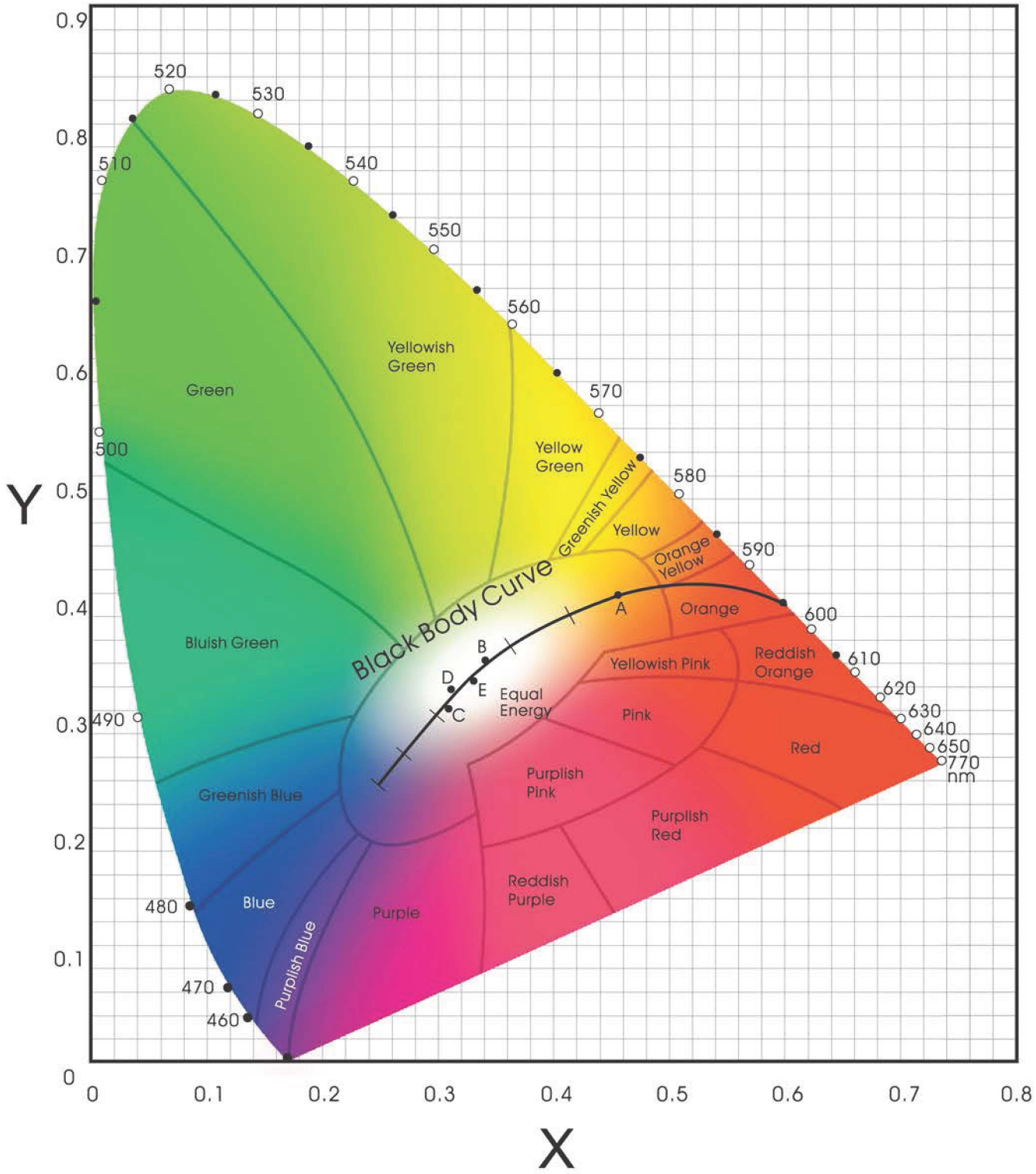

All possible color coordinates(x,y) are on or inside horseshoe curve
Pure colors line on the curve, where as the white point has the coordinates(1/3, 1/3)