TOP LED - Small size & High power white light

P3528 Series

P3528 Series

Thermal Dissipating Structure :

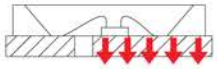

The chip is directly placed on the thermal dissipating pad, and the heat generated from the chip is directly conducted to the PCB.

Outline Dimensions/Unit: mm

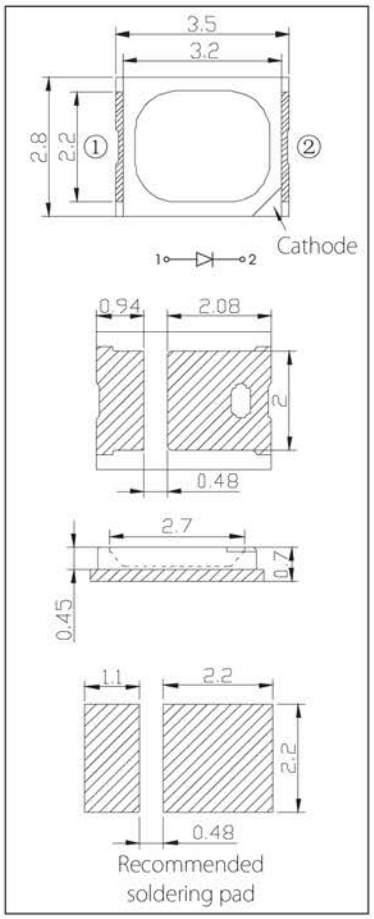

Tolerance: ±0.1mm

Features:

- Thin package with heat sink, high power, equivalent to 5630 power LED;
- Apply to LED bulb, LED downlight and other lighting products;
- Rated power: 0.5W / 0.2W;
- New 0. 2W Plant-growth light for different plants.

Absolute maximum parameters:

Parameter	Symbol	Rating 0.2W	Rating 0.5W
Forward Current	I_F	75mA	200mA
Pulse Forwards Current*2	I_{FP}	200mA	500mA
Reverse Voltage	V_R	5V	
Working Temperature	T_{OPR}	-30~+85℃	
Storage Temperature	T_{STG}	-40~+100℃	

Parameter/Ta=25℃:

Power	Color	Part Number	λp (nm)	I_F(mA) TEST	Po (mW) Typ.	V_F (V) Typ.
0.2W Plant-growth light series	Infrared	VO-FM-P3528IRS-730U	730	60	70	2.0
	DarkRed	VO-FM-P3528HRS-660U	660	60	70	2.0
	Blue	VO-FM-P3528BS-450Q	450	60	90	3.2
	Weak Red	VO-FM-P3528WPS-450Q	(0. 351, 0. 274)	60	90	3.2
	Weak Blue	VO-FM-P3528WBS-450Q	(0. 25, 0. 213)	60	90	3.2
	Weak White	VO-FM-P3528WNS-450Q	(0. 306, 0. 29)	60	90	3.2

Power	Color	Part Number	Color Temperature Tc (K)	CRI Ra Min.	I_F(mA) TEST	Φv (lm) Typ.	V_F (V) Typ.	I_R(μA) Max*1
0.5W	Natural White	VO-FM-P3528WNS-460W	5600-6500	70	150	54	3.2	10
	Neutral White	VO-FM-P3528WDS-460W-R80	3700-4200	80	150	48	3.2	10
	Warm White	VO-FM-P3528WLS-460W-R80	2800-3200	80	150	44	3.2	10
0.2W	Natural White	VO-FM-P3528WNS-460Q	5600-6500	70	60	20	3.2	10
	Neutral White	VO-FM-P3528WDS-460Q-R80	3700-4200	80	60	18	3.2	10
	Warm White	VO-FM-P3528WLS-460Q-R80	2800-3200	80	60	16	3.2	10

• 1 Test condition of reverse current leakage:VR=5V • 2 Pulse width≤0.1ms, Duty cycle≤1/10

TOP LED - High Voltage & High brightness white

TP3528 Series

TP 3528Series

Thermal Dissipating Structure :

The chip is directly placed on the thermal dissipating pad, and the heat generated from the chip is directly conducted to the PCB.

Outline Dimensions/ Unit: mm

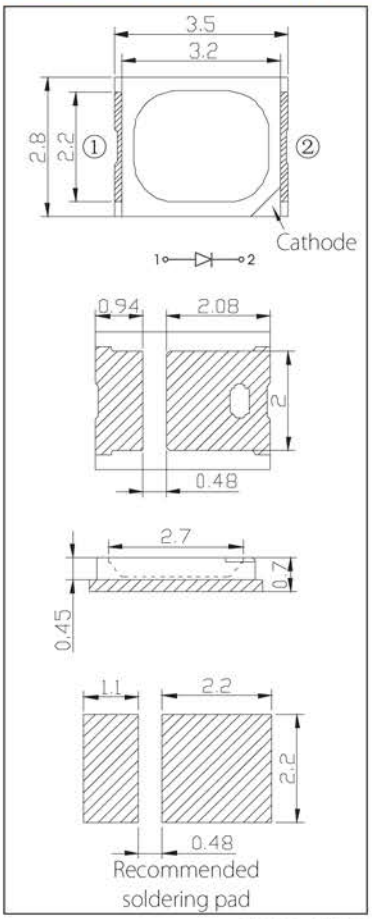

Tolerance: ±0.1mm

Features:

- High Voltage,9V/pcs, and cost effective;
- Thin package with heat sink, good heat dissipation;
- Applications include LED bulb, and downlight;
- Rated power: 0.3W.

Absolute Maximum Ratings:

Parameter	Symbol	Rating
Forward Current	I_F	35mA
Pulse Forwards Current*2	I_{FP}	100mA
Reverse Voltage	V_R	15V
Working Temperature	T_{OPR}	-30~+85℃
Storage Temperature	T_{STG}	-40~+100℃

• Plus Width≤0.1ms, Duty Cycle≤1/10

Parameter/Ta=25℃:

Color	Part Number	Color Temperature Tc (K)	CRI Ra Min.	I_F(mA) TEST	Φv (lm) Typ.	V_F (V) Typ.
Natural White	VO-FM-TP3528WNS-460R	5600-6500	70	30	31	9.6
Neutral White	VO-FM-TP3528WDS-460R-R70	3700-4200	70	30	31	9.6
Warm White	VO-FM-TP3528WLS-460R-R70	2800-3200	70	30	29	9.6

TOP LED - Small size & High brightness & White light 3014 Series

3014 Series

Thermal Dissipating Structure :

The chip is directly placed on the thermal dissipating pad, and the heat generated from the chip is directly conducted to the PCB.

Outline Dimensions/ Unit: mm

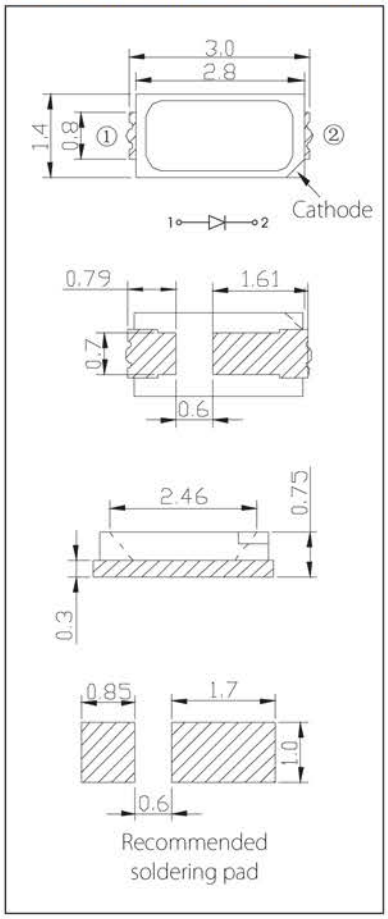

Features:

- Small-size and thin-packing, apply to high-density configuration design;
- CRI R70 or R80 available, typical color temperature 6000K/4000K/3000K;
- Rated power: 0.1W;

Absolute maximum parameters:

Parameter	Symbol	Rating
Forward Current	I_F	35mA
Pulse Forwards Current*2	I_{FP}	100mA
Reverse Voltage	V_R	5V
Working Temperature	T_{OPR}	-30~+85℃
Storage Temperature	T_{STG}	-40~+100℃

Parameter/Ta=25℃:

Color	Part Number	Color Temperature Tc (K)	CRI Ra Min.	I_F(mA) TEST	Φv (lm) Typ.	V_F (V) Typ.	I_R(μA) Max*1
Natural White	VO-FM-3014WNS-460T	5600-6500	70	30	12	3.4	10
Neutral White	VO-FM-3014WDS-460T-R70	3700-4200	70	30	11.5	3.4	10
	VO-FM-3014WDS-460T-R80	3700-4200	80	30	10.5	3.4	10
Warm White	VO-FM-3014WLS-460T-R70	2800-3200	70	30	11	3.4	10
	VO-FM-3014WLS-460T-R80	2800-3200	80	30	10	3.4	10

• 1 Test condition of reverse current leakage:VR=5V • 2 Pulse width≤0.1ms, Duty cycle≤1/10

TOP LED - High brightness & Low cost white light T3528 Series

T3528 Series

Features:

- Thin package, low cost, high illumination efficiency and 120° view angle;
- Various luminosity grades, CRI or color temperatures available;
- Rated power: 0.06W / 0.1W;

Outline Dimensions/ Unit: mm

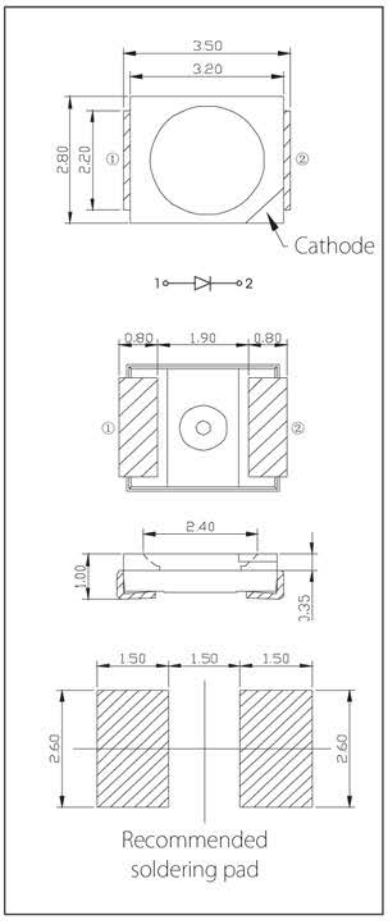

Tolerance unless specified:±0.2mm

Absolute maximum parameters:

Parameter	Symbol	Rating
Forward Current	I_F	35mA
Pulse Forwards Current*2	I_{FP}	100mA
Reverse Voltage	V_R	5V
Working Temperature	T_{OPR}	-30~+85℃
Storage Temperature	T_{STG}	-40~+100℃

Parameter/Ta=25℃:

Rating	Color	Part Number	Color Temperature Tc (K)	CRI Ra Min.	I_F(mA) TEST	Φv (lm) Typ.	V_F (V) Typ.	I_R(μA) Max*1
High Brightness	Natural White	VO-FM-T3528WNS-460T	5600-6500	70	20	8.0	3.2	10
	Neutral White	VO-FM-T3528WDS-460T-R70	3700-4200	70	20	7.8	3.2	10
		VO-FM-T3528WDS-460T-R80	3700-4200	80	20	7.0	3.2	10
	Warm White	VO-FM-T3528WLS-460T-R70	2800-3200	70	20	7.5	3.2	10
		VO-FM-T3528WLS-460T-R80	2800-3200	80	20	6.6	3.2	10
Standard Brightness	Natural White	VO-FM-T3528WNS-460R	5600-6500	70	20	7.0	3.2	10
	Neutral White	VO-FM-T3528WDS-460R-R70	3700-4200	70	20	6.5	3.2	10
	Warm White	VO-FM-T3528WLS-460R-R70	2800-3200	70	20	6.0	3.2	10

• 1 Test condition of reverse current leakage:VR=5V • 2 Pulse width≤0.1ms, Duty cycle≤1/10

TOP LED - High power & High brightness white light 5630 Series

5630 Series

Thermal Dissipating Structure :

The chip is directly placed on the thermal dissipating pad, and the heat generated from the chip is directly conducted to the PCB.

Outline Dimensions/ Unit: mm

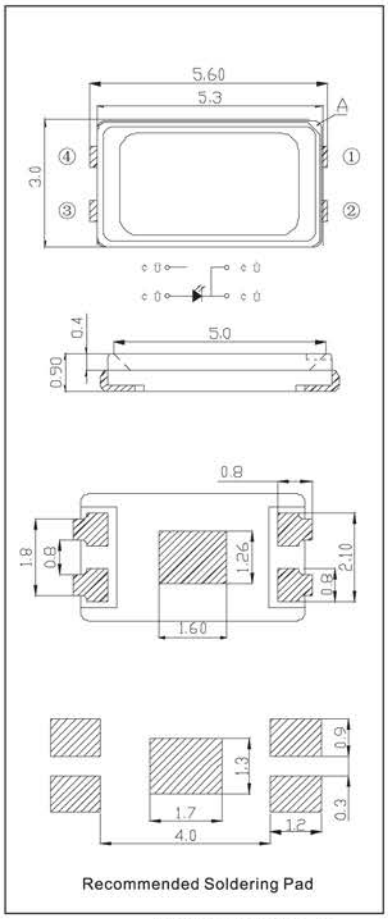

Recommended Soldering Pad

Note: A marks the Cathode
Tolerance unless specified:±0.2mm

Features:

- High power, high brightness, replaces some of the conventional high-power;
- LED with lower cost and smaller size;
- CRI R70 or R80 available, typical color temperature 6000K/4000K/3000K;
- Rated power: 0.5W;

Absolute maximum parameters:

Parameter	Symbol	Rating
Forward Current	I_F	200mA
Pulse Forwards Current*2	I_{FP}	500mA
Reverse Voltage	V_R	5V
Working Temperature	T_{OPR}	-30~+85℃
Storage Temperature	T_{STG}	-40~+100℃

Parameter/Ta=25℃:

Color	Part Number	Color Temperature Tc (K)	CRI Ra Min.	I_F(mA) TEST	Φv (lm) Typ.	V_F (V) Typ.	I_R(μA) Max*1
Natural White	FM-5630WNS-460W	5600-6500	70	150	52	3.2	10
Neutral White	FM-5630WDS-460W-R70	3700-4200	70	150	50	3.2	10
Warm White	FM-5630WLS-460W-R70	2800-3200	70	150	48	3.2	10

• 1 Test condition of reverse current leakage:VR=5V • 2 Pulse width≤0.1ms, Duty cycle≤1/10

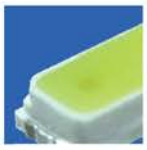

TOP LED - High brightness & White backlight

4014 Series

4014 Series

Thermal Dissipating Structure :

The chip is directly placed on the thermal dissipating pad, and the heat generated from the chip is directly conducted to the PCB.

Outline Dimensions/ Unit: mm

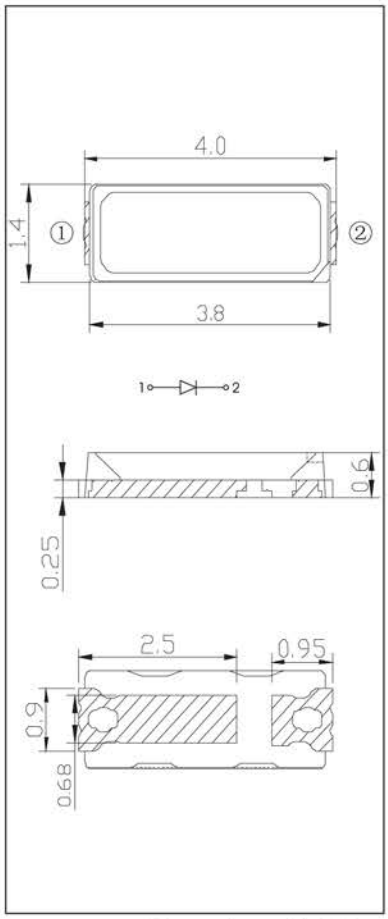

Tolerance unless specified:±0.2mm

Features:

- Long and thin package with heat sink and fast thermal conductive function;
- High luminous flux, high reliability and long lifespan;
- Especially suitable for the backlight products;
- Rated power: 0.2W;

Absolute maximum parameters:

Parameter	Symbol	Rating
Forward Current	I_F	75mA
Pulse Forwards Current*2	I_{FP}	200mA
Reverse Voltage	V_R	5V
Working Temperature	T_{OPR}	-30~+85℃
Storage Temperature	T_{STG}	-40~+100℃

Parameter/Ta=25℃:

Color	Part Number	Color Temperature Tc (K)	CRI Ra Min.	I_F(mA) TEST	Φ_V (lm) Typ.	V_F (V) Typ.	I_R(μA) Max*1
Cool White	VO-FM-4014WS-460Q	>7000	70	60	18	3.2	10

• 1 Test condition of reverse current leakage:VR=5V • 2 Pulse width≤0.1ms, Duty cycle≤1/10

TOP LED - High voltage & White LED

D4014 Series

D4014 Series

Thermal Dissipating Structure :

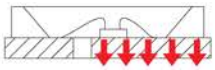

The chip is directly placed on the thermal dissipating pad, and the heat generated from the chip is directly conducted to the PCB.

Outline Dimensions/ Unit: mm

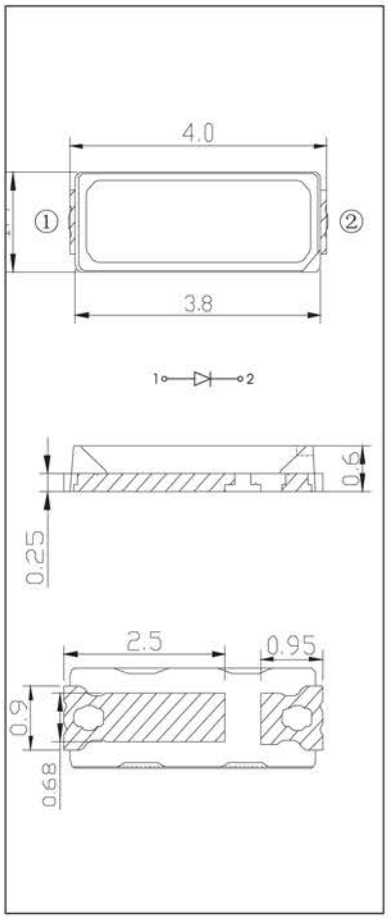

Tolerance unless specified:±0.2mm

Features:

- High Voltage 6V/pcs;
- Thin package with heat sink, good heat dissipation;
- Application for tube light, cost-effective;
- Rated power: 0.2W.

Absolute maximum parameters:

Parameter	Symbol	Rating
Forward Current	I_F	35mA
Pulse Forwards Current*2	I_{FP}	100mA
Reverse Voltage	V_R	10V
Working Temperature	T_{OPR}	-30~+85℃
Storage Temperature	T_{STG}	-40~+100℃

Parameter/Ta=25℃:

Color	Part Number	Color Temperature Tc (K)	CRI Ra Min.	I_F(mA) TEST	Φ_V (lm) Typ.	V_F (V) Typ.
Natural White	VO-FM-D4014WNS-460R	5600-6500	70	30	21	6.4
Neutral White	VO-FM-D4014WDS-460R-R70	3700-4200	70	30	21	6.4
Warm White	VO-FM-D4014WLS-460R-R70	2800-3200	70	30	19	6.4

• 1 Test condition of reverse current leakage:VR=5V • 2 Pulse width≤0.1ms, Duty cycle≤1/10

TOP LED - High brightness & Low cost white light 3528 Series

3528 Series

Outline Dimensions/ Unit: mm

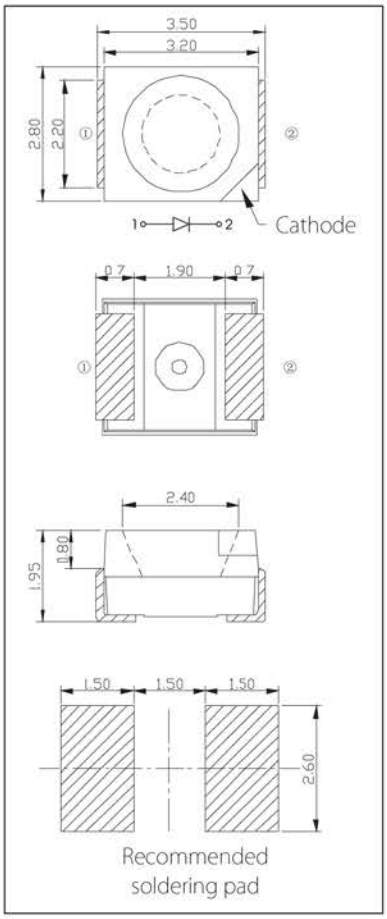

Tolerance unless specified:±0.2mm

Features:

- General size, widely used in various kinds of lighting products;
- Various luminosity levels, CRI or color temperatures available;
- Rated power: 0.06W;

Absolute maximum parameters:

Parameter	Symbol	Rating
Forward Current	I_F	25mA
Pulse Forwards Current*2	I_{FP}	100mA
Reverse Voltage	V_R	5V
Working Temperature	T_{OPR}	-30~+85℃
Storage Temperature	T_{STG}	-40~+100℃

Parameter/Ta=25℃:

Color	Part Number	Color Temperature Tc (K)	CRI Ra Min.	I_F(mA) TEST	Φv (lm) Typ.	V_F (V) Typ.
Natural White	VO-FM-3528WS-460L	7000	/	20	6.0	3.2
Warm White	VO-FM-3528WLS-460L	3000	/	20	5.5	3.2

• 1 Test condition of reverse current leakage:VR=5V • 2 Pulse width≤0.1ms, Duty cycle≤1/10

TOP LED - High brightness & High reliability white light 3-chip T5050 Series

T5050 Series

Features:

- General size, good color-conformity, widely used in various kinds of lighting products;
- Rated power: 0.2W;

Outline Dimensions/ Unit: mm

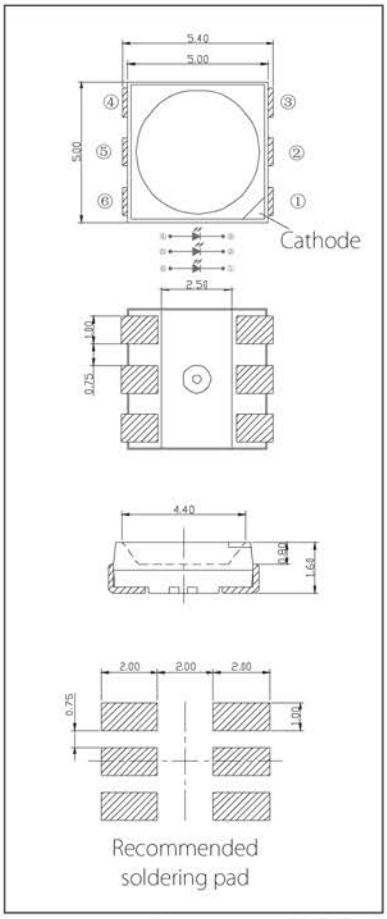

Tolerance unless specified:±0.2mm

Absolute maximum parameters:

Parameter	Symbol	Rating
Forward Current	I_F	3*25mA
Pulse Forwards Current*2	I_{FP}	3*100mA
Reverse Voltage	V_R	5V
Working Temperature	T_{OPR}	-30~+85℃
Storage Temperature	T_{STG}	-40~+100℃

Parameter/Ta=25℃:

Rating	Color	Part Number	Color Temperature Tc (K)	CRI Ra Min.	I_F(mA) TEST	Φv (lm) Typ.	V_F (V) Typ.	I_R(μA) Max*1
Standard Brightness	Natural White	VO-FM-T5050WNS-460R	5600-6500	70	60	20	3.2	10
	Neutral White	VO-FM-T5050WDS-460R-R70	3700-4200	70	60	18	3.2	10
	Warm White	VO-FM-T5050WLS-460R-R70	2800-3200	70	60	17	3.2	10
Low Brightness	Natural White	VO-FM-T5050WS-460L	7000	-	60	18	3.2	10
	Neutral White	VO-FM-T5050WLS-460L	3000	-	60	17	3.2	10

• 1 Test condition of reverse current leakage:VR=5V • 2 Pulse width≤0.1ms, Duty cycle≤1/10

TOP LED - Small size & Power white light

2121 Series

2121 Series

Thermal Dissipating Structure :

The chip is directly placed on the thermal dissipating pad, and the heat generated from the chip is directly conducted to the PCB.

Outline Dimensions/ Unit: mm

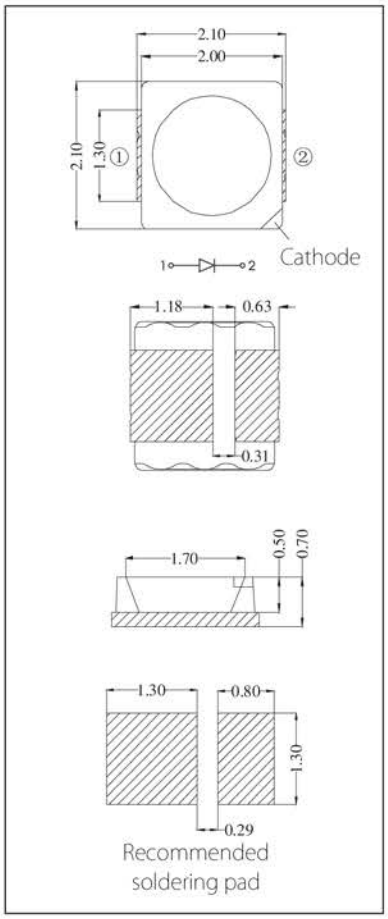

Tolerance unless specified:±0.2mm

Features:

- Small size, 60mA forward current available;
- Application include high-density configuration design;
- With heat sink, fast heat dissipation function and high reliability;
- Rated power: 0.2W;

Absolute maximum parameters:

Parameter	Symbol	Rating
Forward Current	I_F	75mA
Pulse Forwards Current*2	I_{FP}	200mA
Reverse Voltage	V_R	5V
Working Temperature	T_{OPR}	-30~+85℃
Storage Temperature	T_{STG}	-40~+100℃

Parameter/Ta=25℃:

Color	Part Number	Color Temperature Tc (K)	CRI Ra Min.	I_F(mA) TEST	Φ_V (lm) Typ.	V_F (V) Typ.	I_R(μA) Max*1
Natural White	VO-FM-2121WNS-460Q	5600-6500	70	60	21	3.2	10
Neutral White	VO-FM-2121WDS-460Q-R80	3700-4200	80	60	18	3.2	10
Warm White	VO-FM-2121WLS-460Q-R80	2800-3200	80	60	16	3.2	10

• 1 Test condition of reverse current leakage:VR=5V • 2 Pulse width≤0.1ms, Duty cycle≤1/10