High power LED - EMC Package power LED
3535 Series

3535 Series

Features:

- Good heat resistance and yellowing resistance;
- Good airtight performance;
- High brightness, high power;
- Rated power: 1~2W;

Outline Dimensions/ Unit: mm

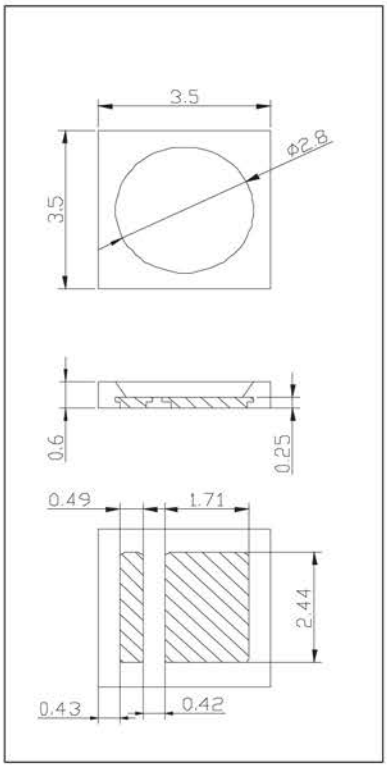

Tolerance unless specified:±0.2mm

Absolute maximum parameters:

Parameter	Symbol	Rating
Forward Current	I_F	400mA
Pulse Forwards Current*2	I_{FP}	1000mA
Reverse Voltage	V_R	5V
Working Temperature	T_{OPR}	-30~+85℃
Storage Temperature	T_{STG}	-40~+100℃

Parameter/Ta=25℃:

Part Number	Color	Color Temperature Tc (K)	I_F(mA)TEST	V_F (V) Typ.	ϕv (lm) Typ.	CRI Ra Min.
			Typ.	Typ.		
VO-EMC 3535	Natural White	5600-6500	350	3.2	120	70
	Neutral White	3700-4200	350	3.2	115	70
	Warm White	2800-3200	350	3.2	110	80

• 1 Test condition of reverse current leakage:VR=5V • 2 Pulse width≤0.1ms, Duty cycle≤1/10

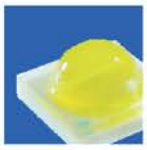

High power LED - Ceramic base reverse bonding LED 3535 Series

3535 Series

Features:

- New eutectic die bonding,without golden wire package,high reliability;
- Ceramic PCB;
- High brightness, high luminous efficiency;
- Rated power: 1~3W

Outline Dimensions/ Unit: mm

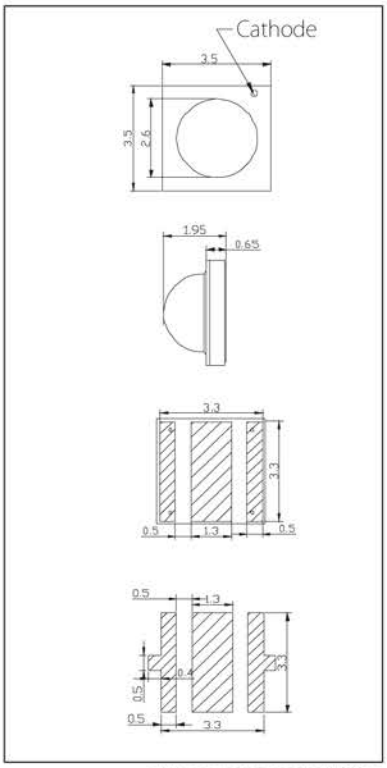

Tolerance unless specified:±0.2mm

Absolute maximum parameters:

Parameter	Symbol	Rating
Forward Current	I_F	1000mA
Pulse Forwards Current*2	I_{FP}	1500mA
Reverse Voltage	V_R	5V
Working Temperature	T_{OPR}	-30~+85℃
Storage Temperature	T_{STG}	-40~+100℃

Parameter/Ta=25℃:

Part Number	Color	Color Temperature Tc (K)	I_F(mA) TEST	V_F (V) Typ.		Φv (lm) Typ.	CRI Ra Min.
			Typ.	Typ.	Max		
VO-Ceramic PCB 3535	Natural White	5600-6500	350	3.0	3.4	120-130	70
	Neutral White	3700-4200	350	3.0	3.4	110-120	70
	Warm White	2800-3200	350	3.0	3.4	90-100	80

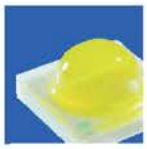

High power LED-Ceramic base

3535 Series

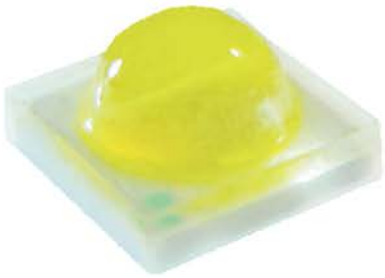

3535 Series

Features:

- HTCC ceramic base with high reliability;
- Thermoelectric separated structure,easy reflow soldering process;
- Excellent optics design,effectively reduced systematic luminosity loss;
- Rated power: 1~2W;

Outline Dimensions/ Unit: mm

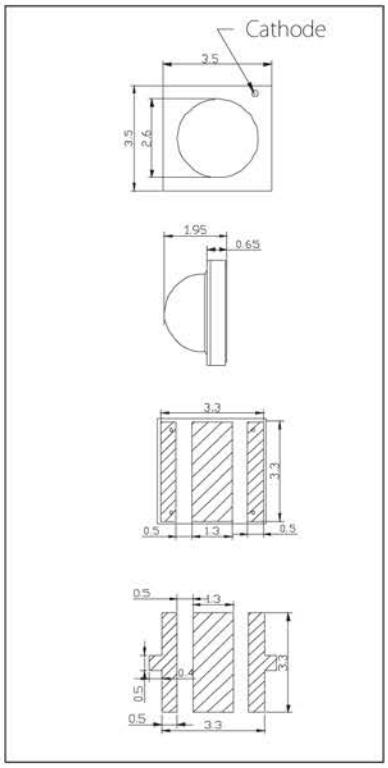

Tolerance unless specified:±0.2mm

Absolute maximum parameters:

Parameter	Symbol	Rating
Forward Current	I_F	400mA
Pulse Forwards Current*2	I_{FP}	1500mA
Reverse Voltage	V_R	5V
Working Temperature	T_{OPR}	-20~+85℃
Storage Temperature	T_{STG}	-30~+100℃

Parameter/Ta=25℃:

Color	Part Number	Color Temperature Tc (K)	CRI Ra Min.	I_F(mA) TEST	Φ_V (lm) Typ.	V_F (V) Typ.
Natural White	VO-FP-3535CW-BCW-LBM	5600-6500	70	350	100	3.2
Neutral White	VO-FP-3535NW-BCW-LBM	3700-4200	70	350	90	3.2
Warm White	VO-FP-3535WW-BCW-R70-LBM	2800-3200	70	350	85	3.2

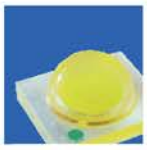

High power LED - PCB Base

6070 Series

6070 Series

Features:

- Patented PCB base structure, fast thermal dissipation function with low thermal resistance;
- Available for outdoor white light illumination;
- Rated power: 1~2W;

Absolute maximum parameters:

Parameter	Symbol	Rating
Forward Current	I_F	FP-6070XW-AFZ-LBM 400mA
		FP-6070XW-AFZ-ED1M 500mA
Pulse Forwards Current*2	I_{FP}	700mA
Reverse Voltage	V_R	5V
Working Temperature	T_{OPR}	-30~+85℃
Storage Temperature	T_{STG}	-40~+100℃

Outline Dimensions/ Unit: mm

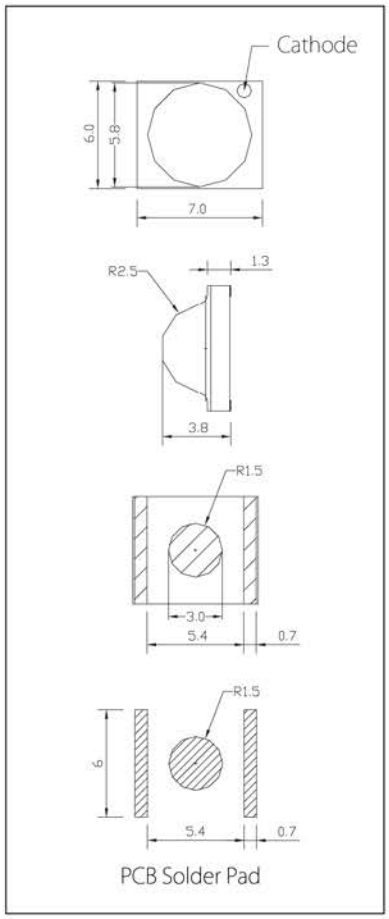

Tolerance unless specified:±0.2mm

Parameter/Ta=25℃:

Rating	Color	Part Number	Color Temperature Tc (K)	CRI Ra Min.	I_F(mA) TEST	Φv (lm) Typ.	V_F (V) Typ.
High Brightness	Natural White	VO-FP-6070CW-AFZ-ED1M	5600-6500	70	350	135	3.2
	Neutral White	VO-FP-6070NW-AFZ-ED1M	3700-4200	70	350	120	3.2
	Warm White	VO-FP-6070WW-AFZ-R80-ED1M	2800-3200	80	350	110	3.2
Standard Brightness	Natural White	VO-FP-6070CW-AFZ-LBM	5600-6500	70	350	110	3.2
	Neutral White	VO-FP-6070NW-AFZ-LBM	3700-4200	70	350	100	3.2
	Warm White	VO-FP-6070WW-AFZ-R70-LBM	2800-3200	70	350	90	3.2

• 1 Test condition of reverse current leakage:VR=5V • 2 Pulse width≤0.1ms, Duty cycle≤1/10